BUGATTI VEYRON

PAPER-SUPER-CRAFT

Designed by Taras Lesko

visualspicer.com

Not for resale or reproduction. © 2013 VisualSpicer.com

TIPS

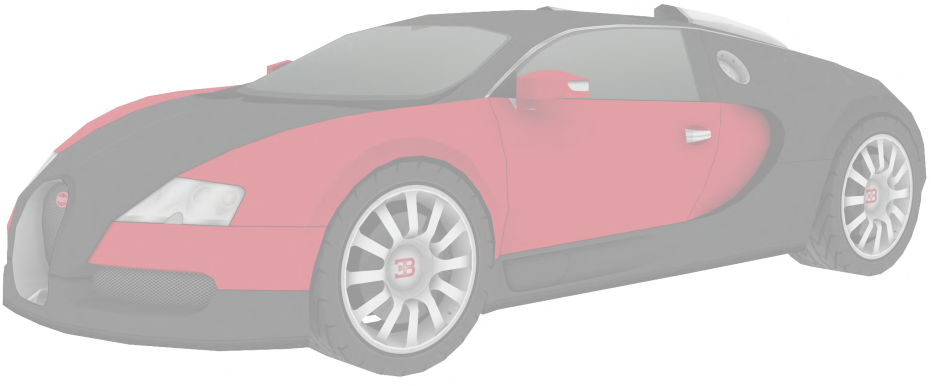

View more details about this project at bit.ly/VeyronPapercraft
or scan the QR code to view the page on your mobile device.

Designed by Taras Lesko. Not for resale or reproduction. © 2013 VisualSpicer.com

Paper Size

- This document is designed for **A4** and **Letter** size paper.

Printing

1. Select your printer in “Print” dialog.
2. Select your page size in “Printer Properties” dialog.
3. Select the “Fit to page” size option in “Print” dialog.
4. Press “Print” button.

Tools & Materials

- 110lb / 200gsm cardstock paper (recommended)
- Printer
- X-Acto knife (optional)
- Scissors (optional)
- Markers (optional)
- Ruler (optional)

Miscellaneous

- Glue only one part at a time.
- Glue only two or three tabs at a time.
- If you mess up, reprint templates and try again.
- Experiment, enjoy and have fun!

Designed by Taras Lesko. Not for resale or reproduction. © 2013 VisualSpicer.com

TEMPLATES

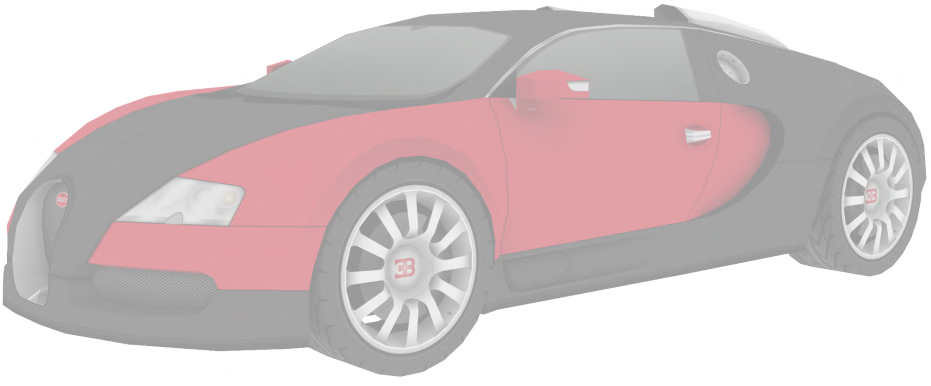

Designed by Taras Lesko. Not for resale or reproduction. © 2013 VisualSpicer.com

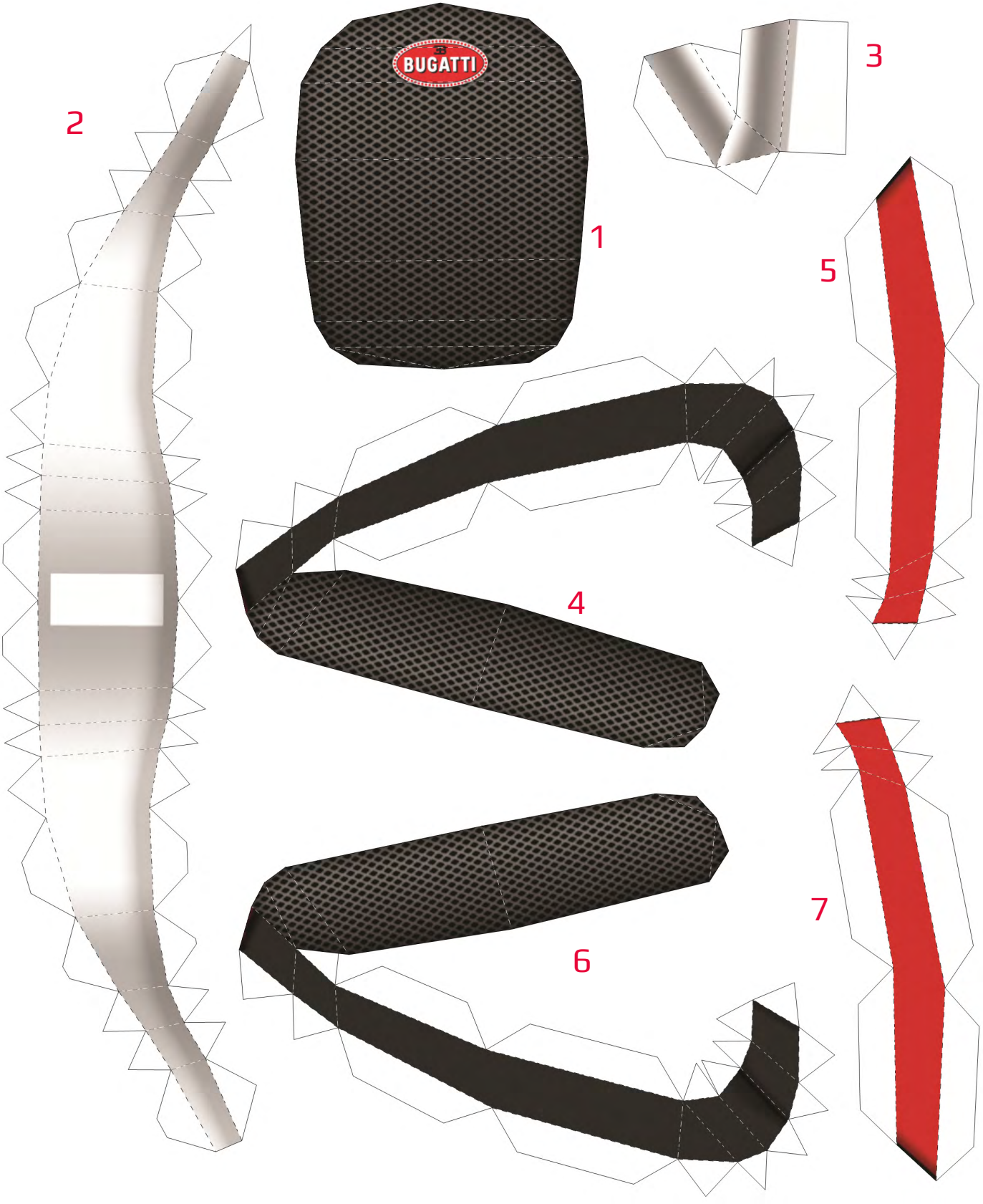

Designed by Taras Lesko. Not for resale or reproduction. © 2013 VisualSpicer.com

Designed by Taras Lesko. Not for resale or reproduction. © 2013 VisualSpicer.com

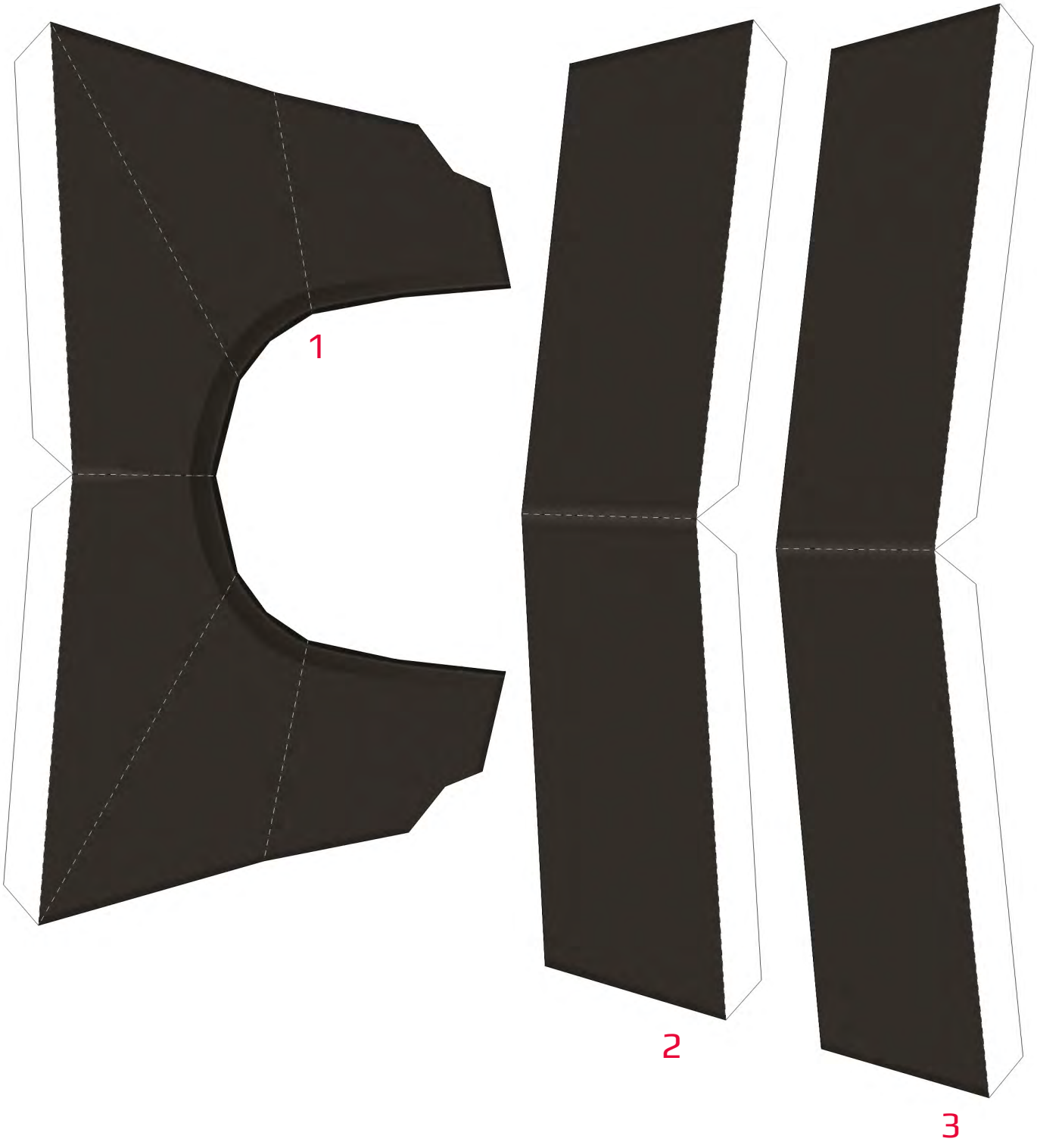

Designed by Taras Lesko. Not for resale or reproduction. © 2013 VisualSpicer.com

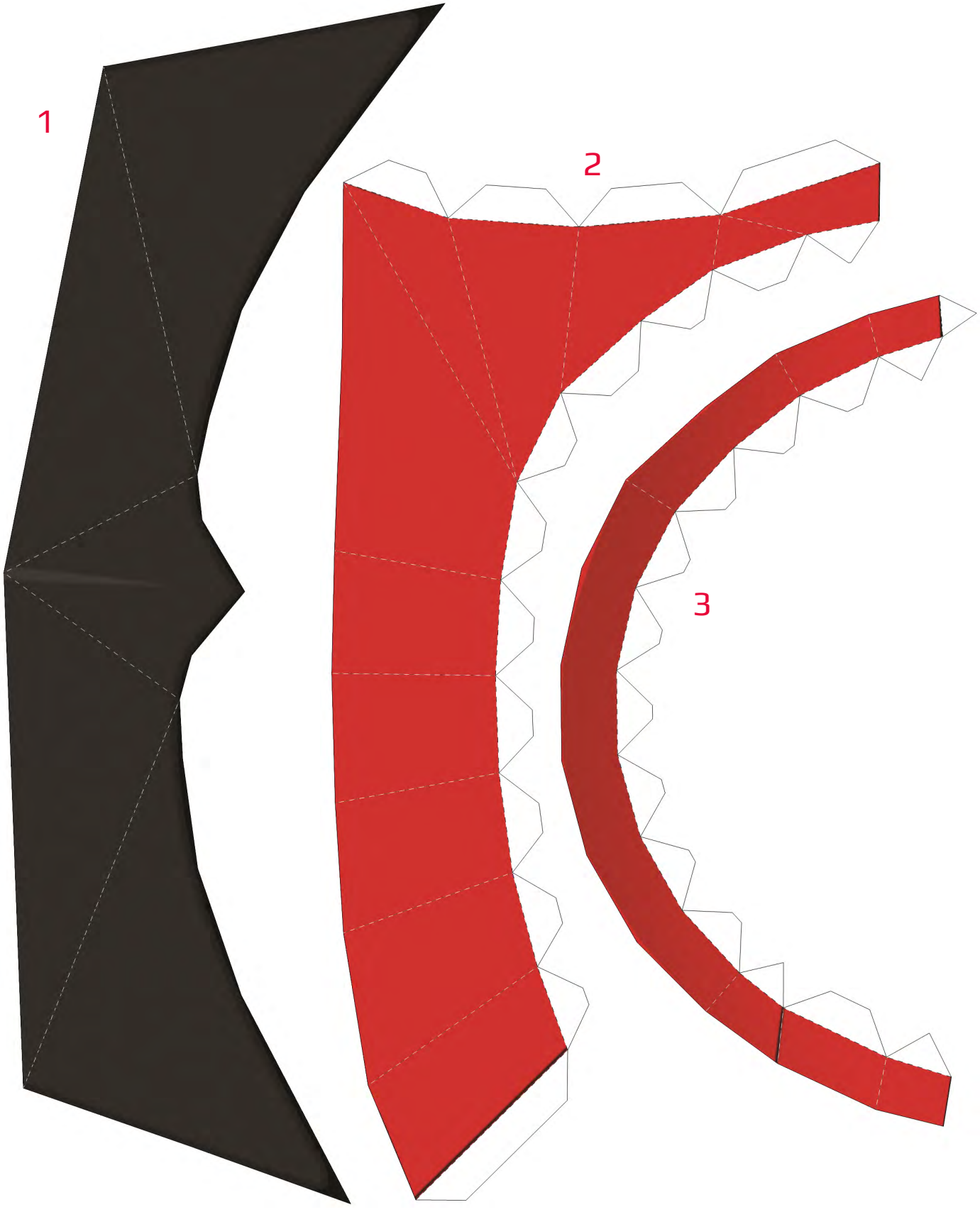

Designed by Taras Lesko. Not for resale or reproduction. © 2013 VisualSpicer.com

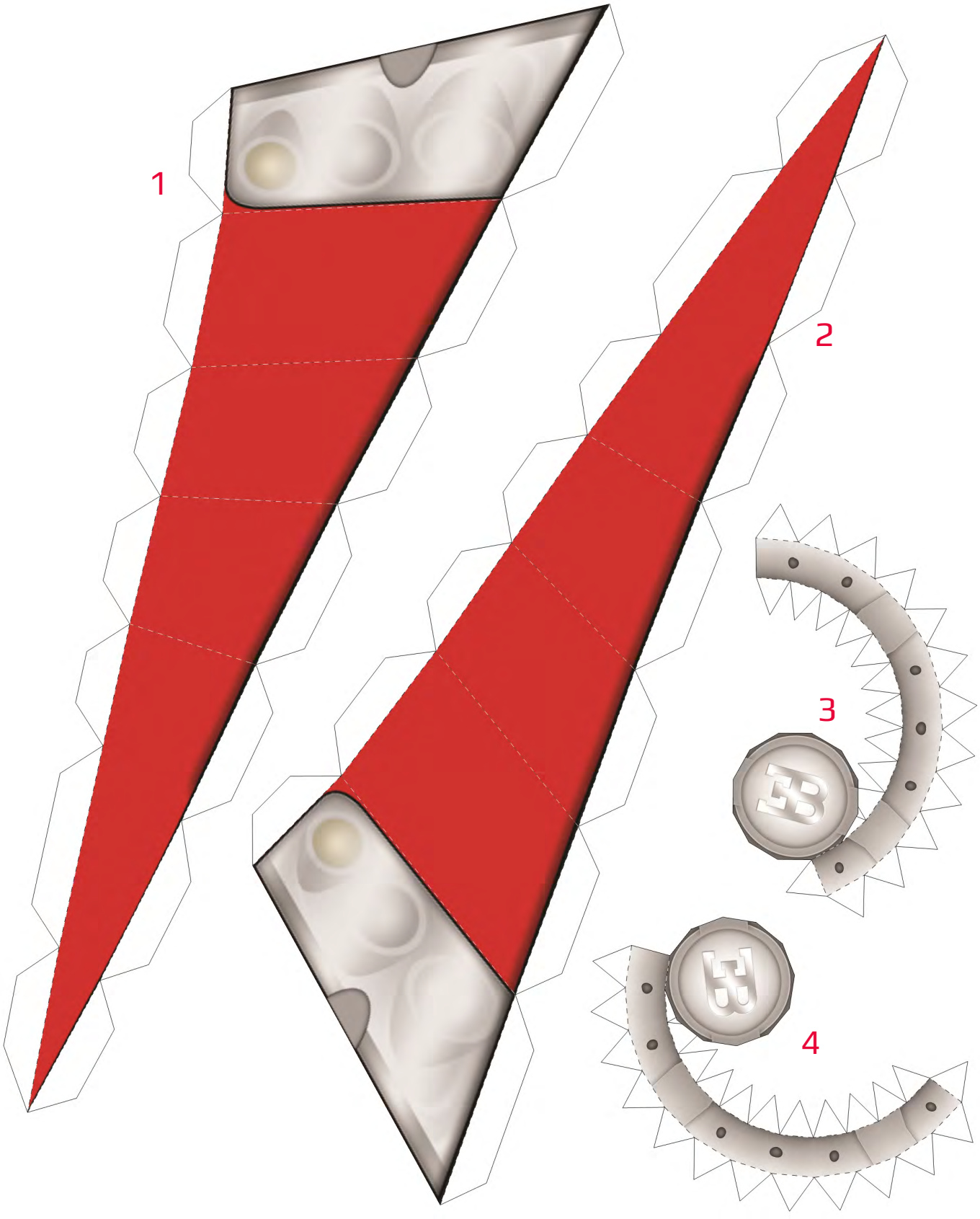

Designed by Taras Lesko. Not for resale or reproduction. © 2013 VisualSpicer.com

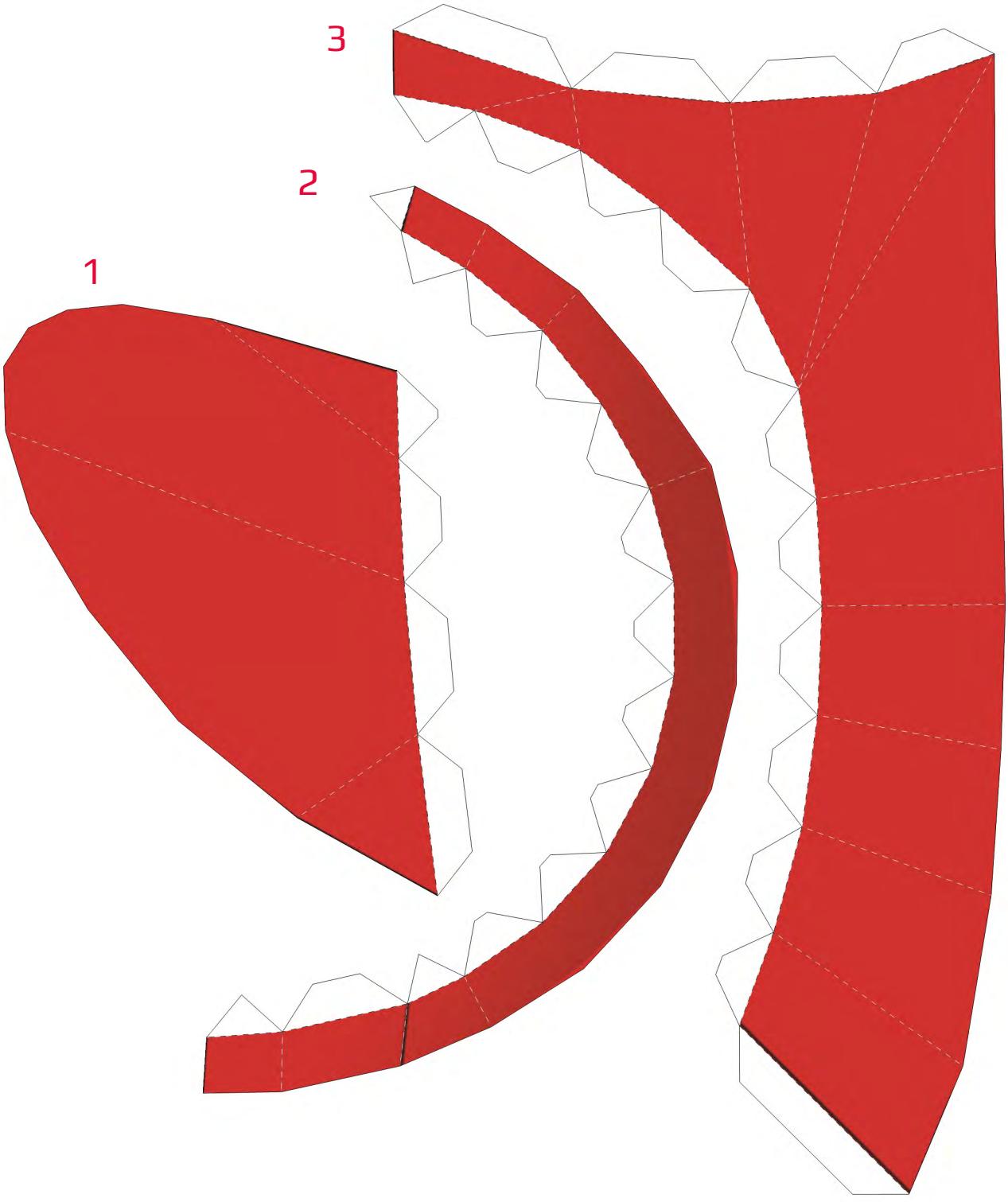

Designed by Taras Lesko. Not for resale or reproduction. © 2013 VisualSpicer.com

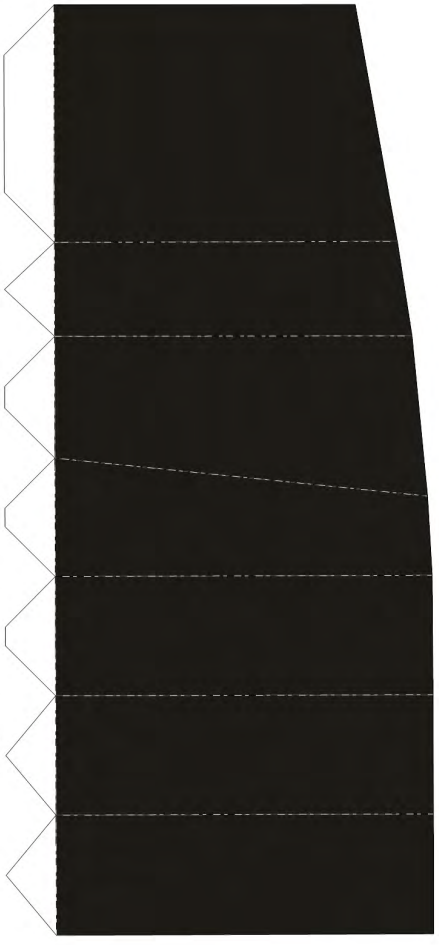

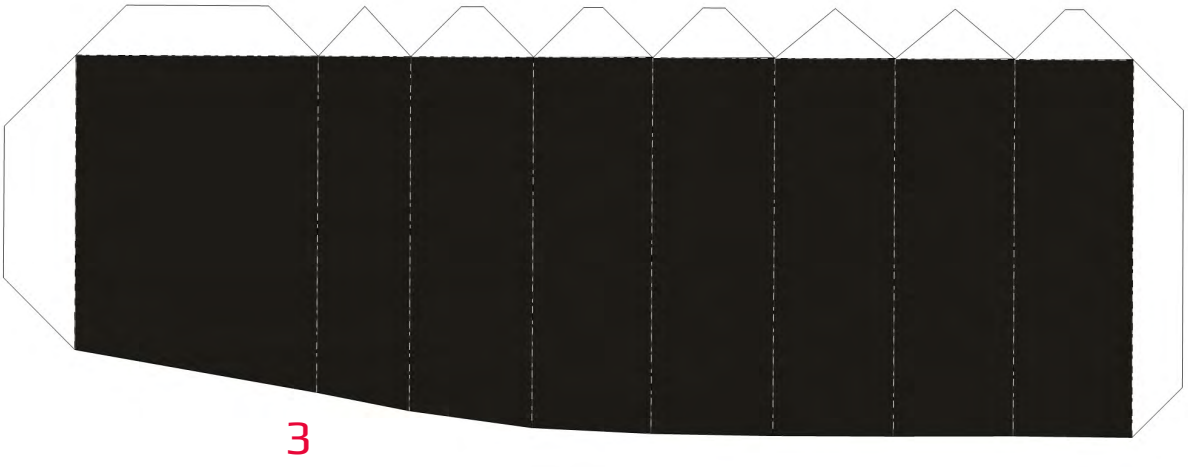

Designed by Taras Lesko. Not for resale or reproduction. © 2013 VisualSpicer.com

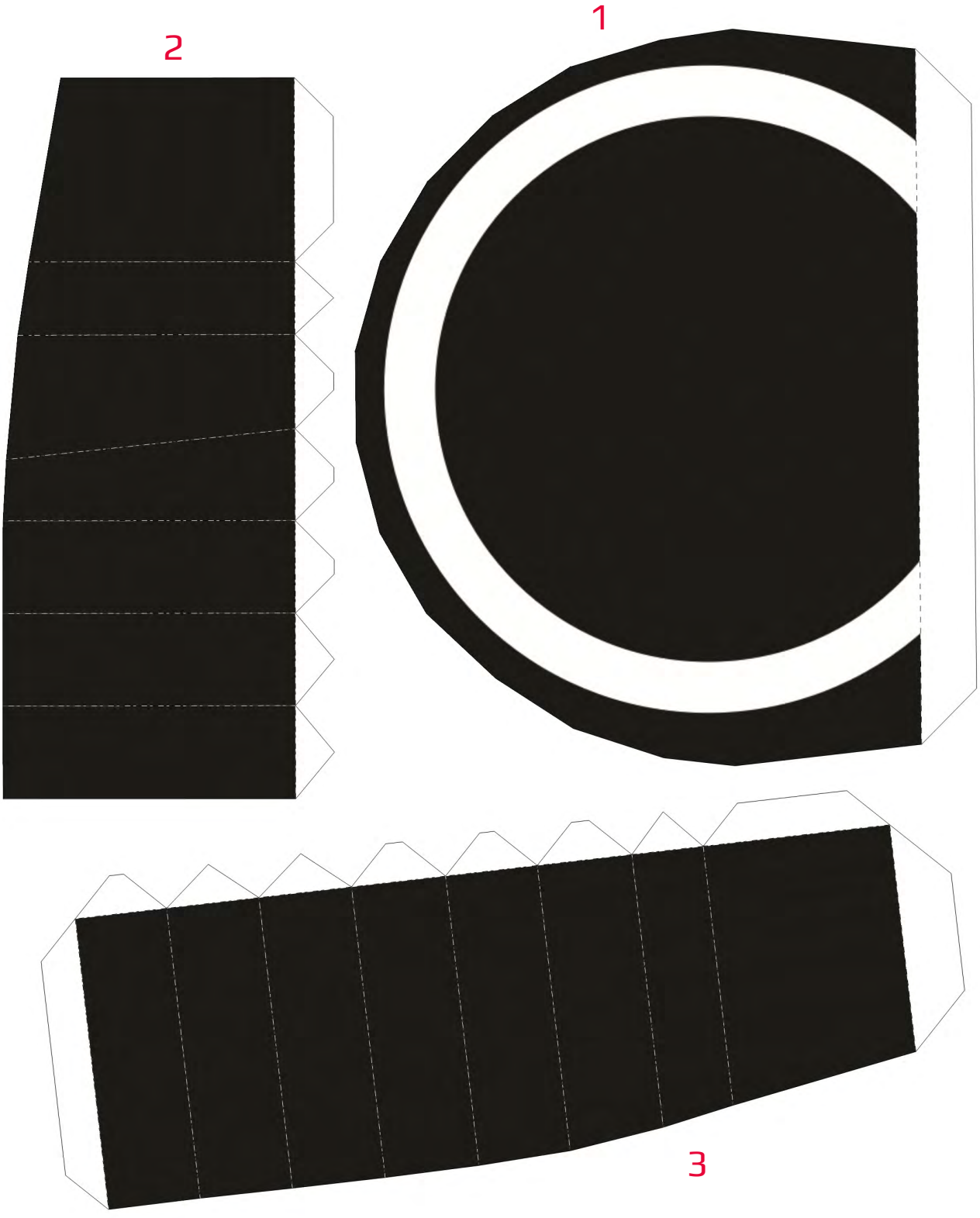

Designed by Taras Lesko. Not for resale or reproduction. © 2013 VisualSpicer.com

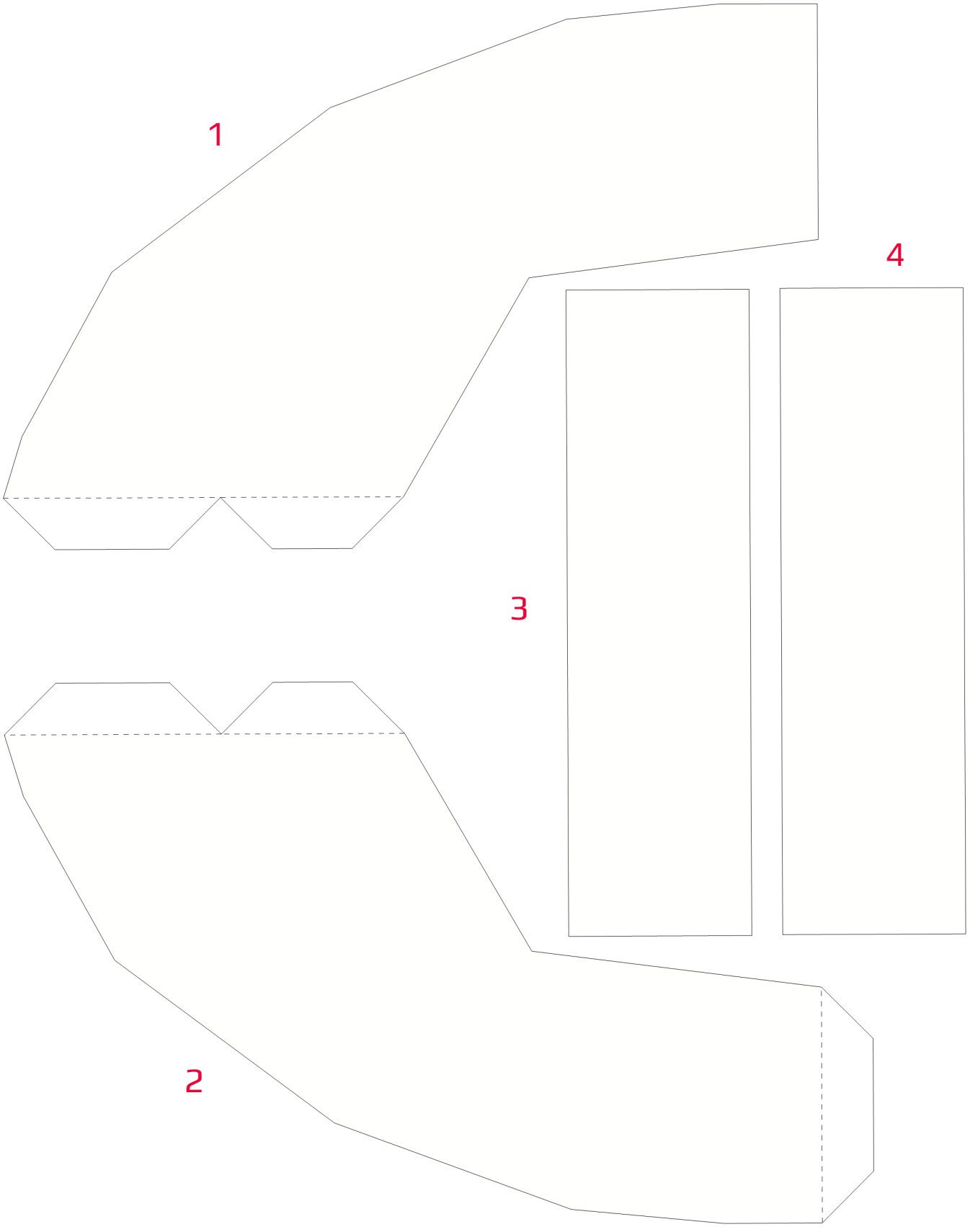

Designed by Taras Lesko. Not for resale or reproduction. © 2013 VisualSpicer.com

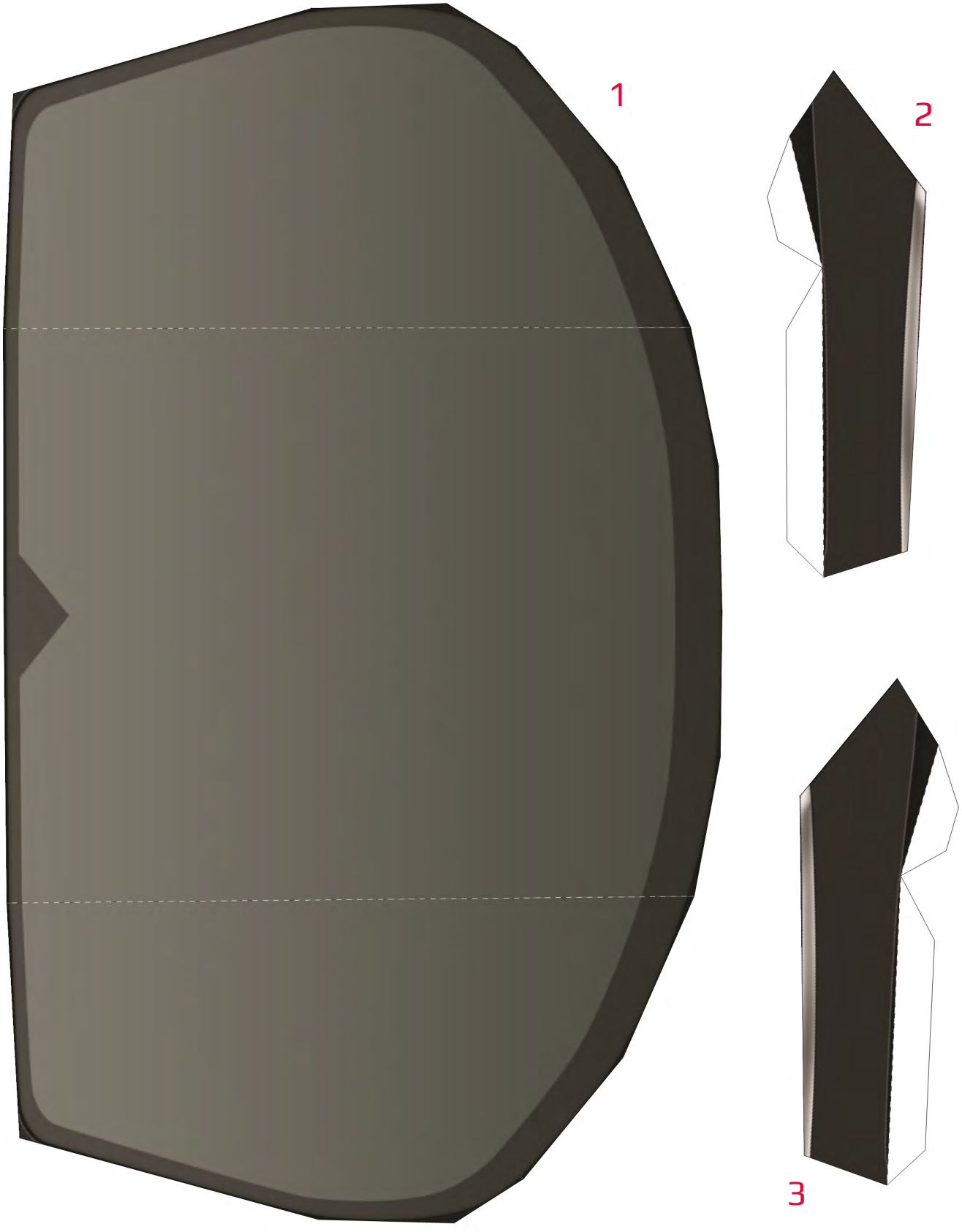

Designed by Taras Lesko. Not for resale or reproduction. © 2013 VisualSpicer.com

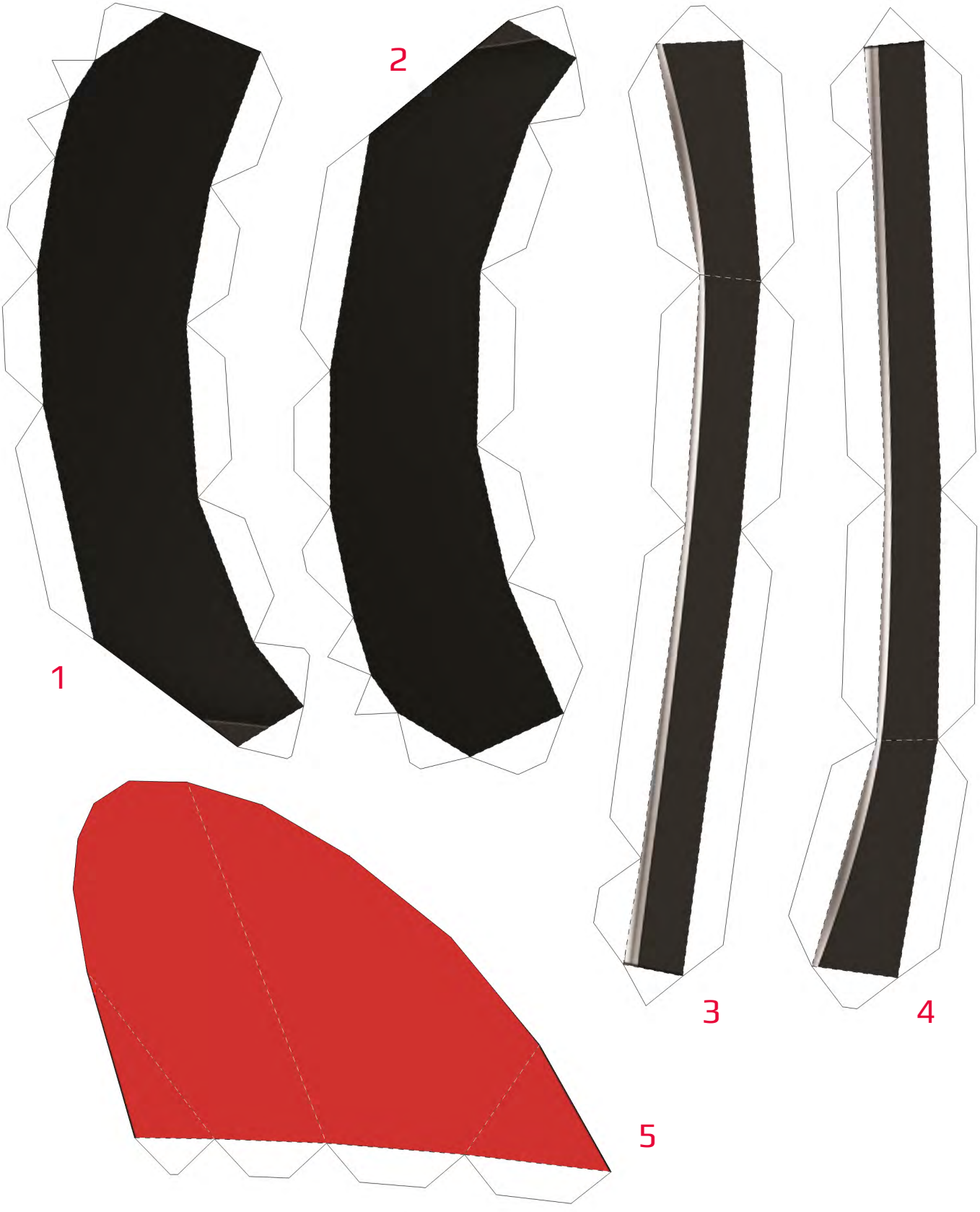

Designed by Taras Lesko. Not for resale or reproduction. © 2013 VisualSpicer.com

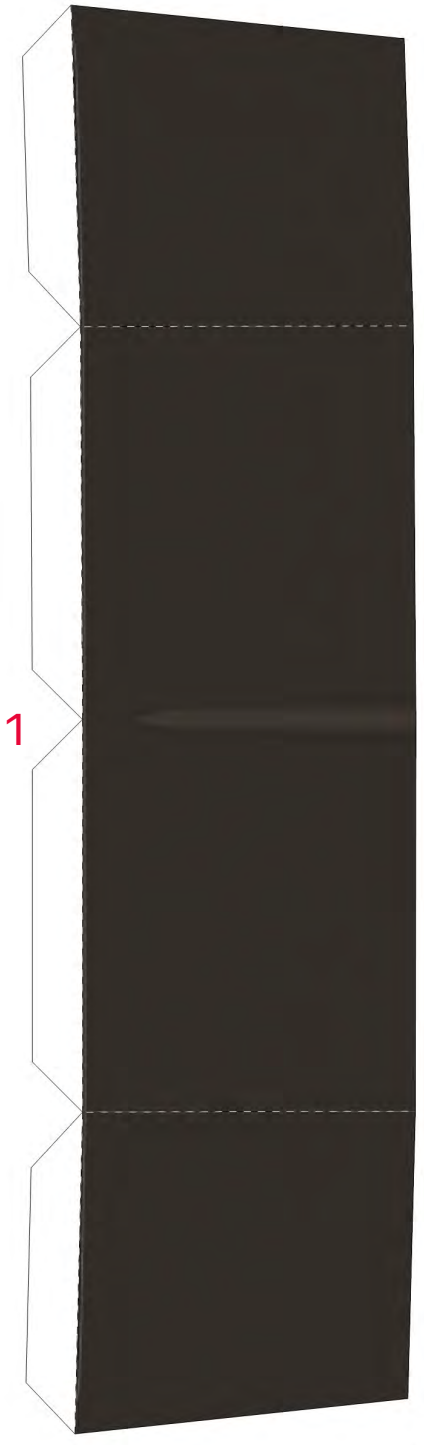

1

2

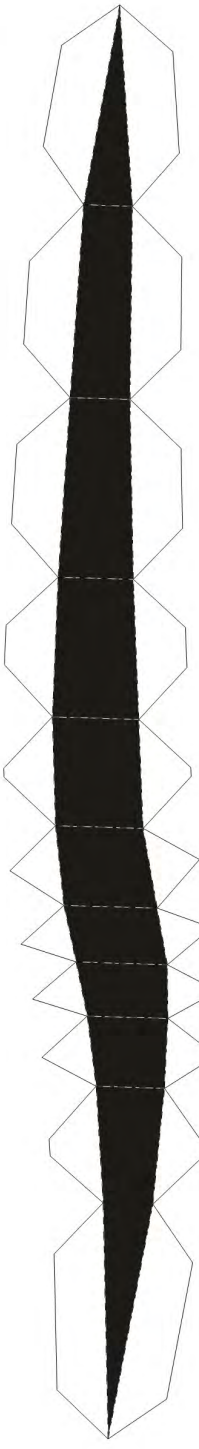

4

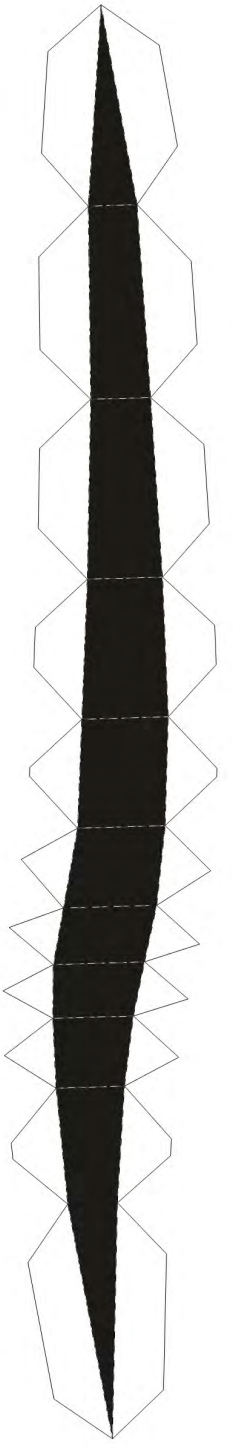

5

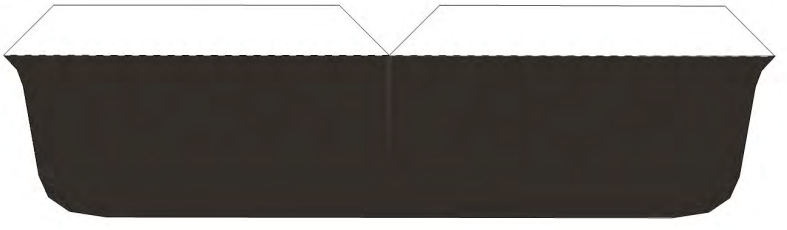

3

Designed by Taras Lesko. Not for resale or reproduction. © 2013 VisualSpicer.com

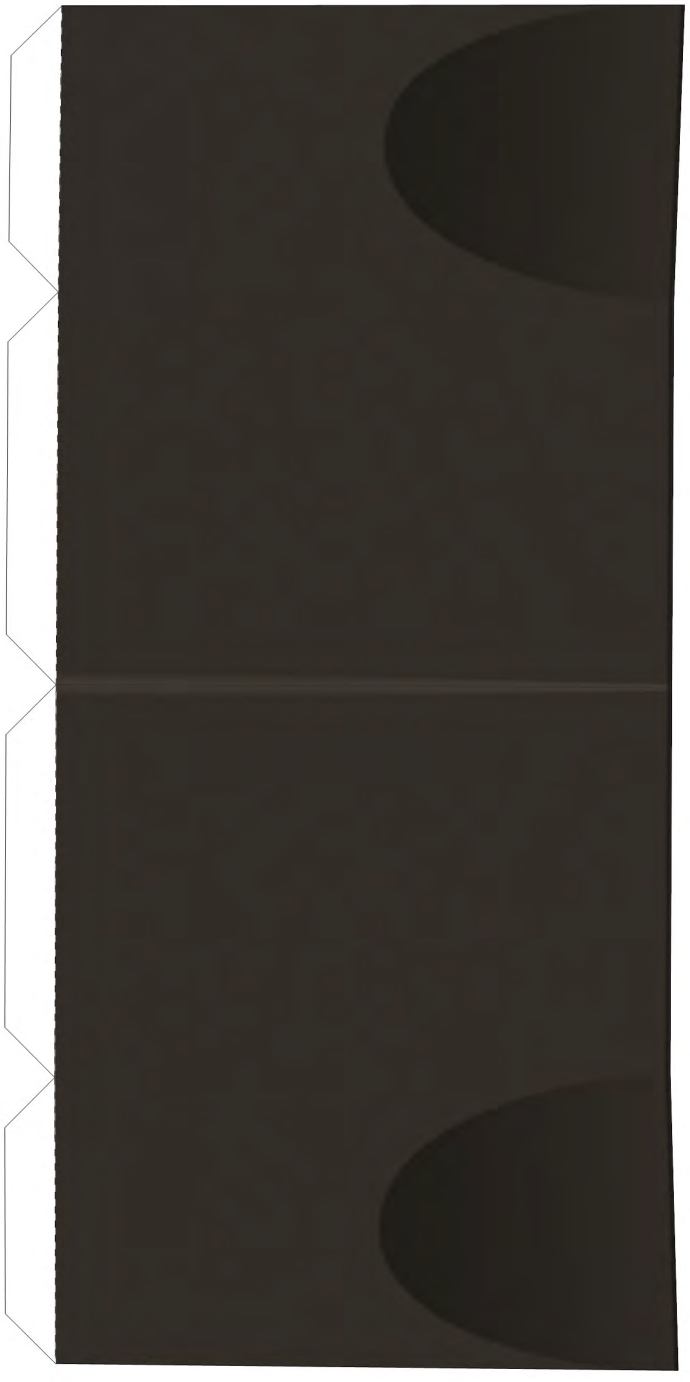

1

2

Designed by Taras Lesko. Not for resale or reproduction. © 2013 VisualSpicer.com

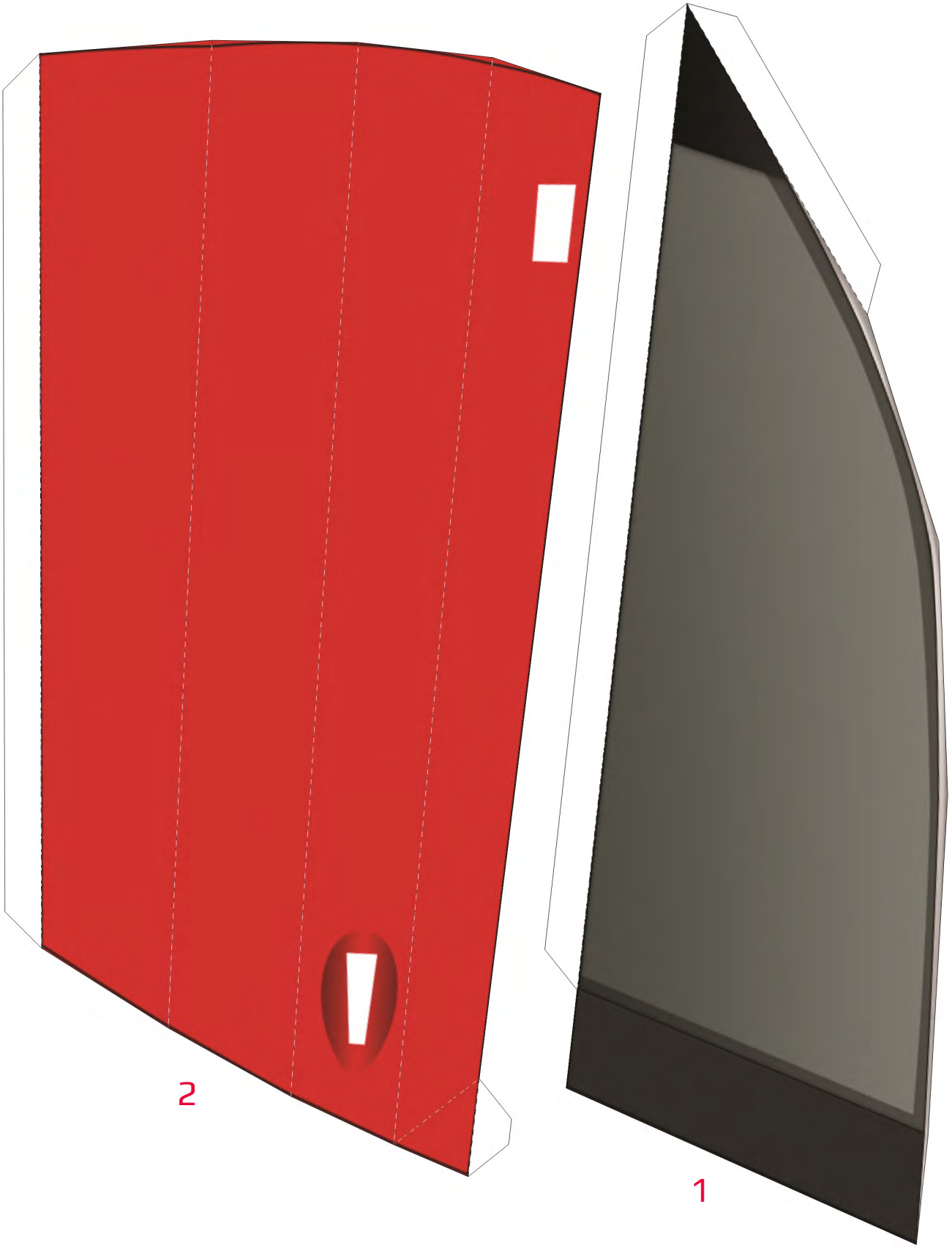

Designed by Taras Lesko. Not for resale or reproduction. © 2013 VisualSpicer.com

Designed by Taras Lesko. Not for resale or reproduction. © 2013 VisualSpicer.com

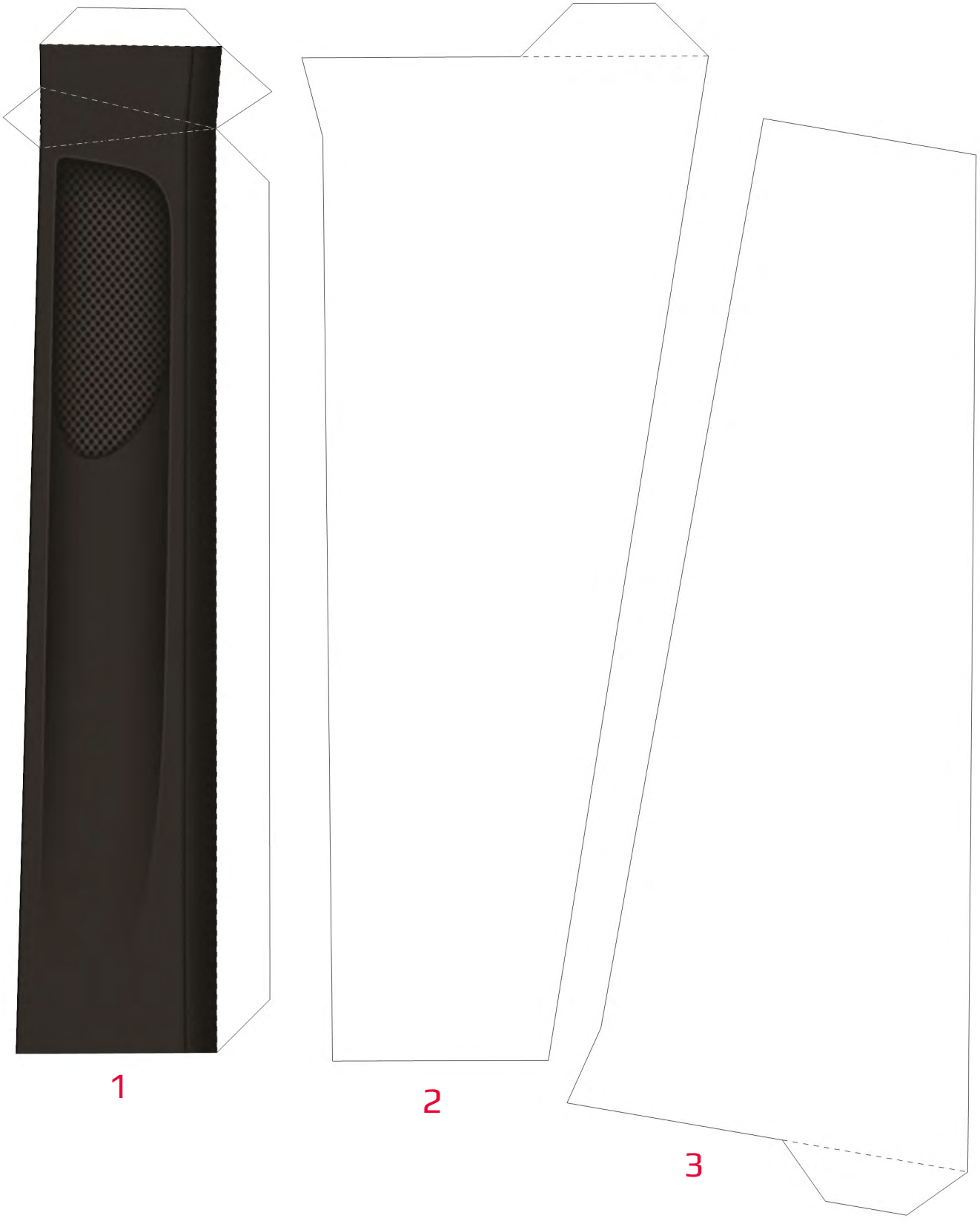

Designed by Taras Lesko. Not for resale or reproduction. © 2013 VisualSpicer.com

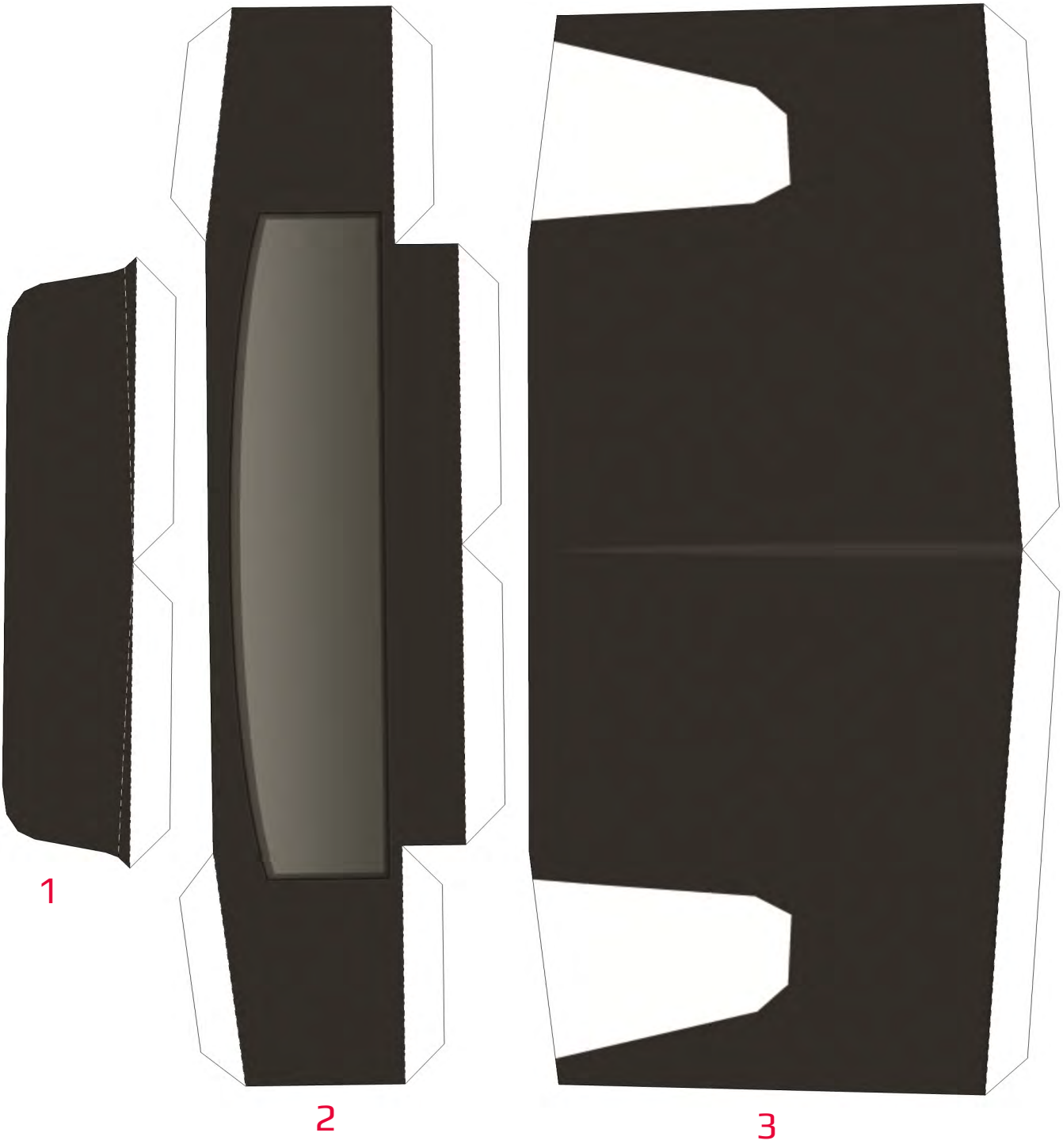

Designed by Taras Lesko. Not for resale or reproduction. © 2013 VisualSpicer.com

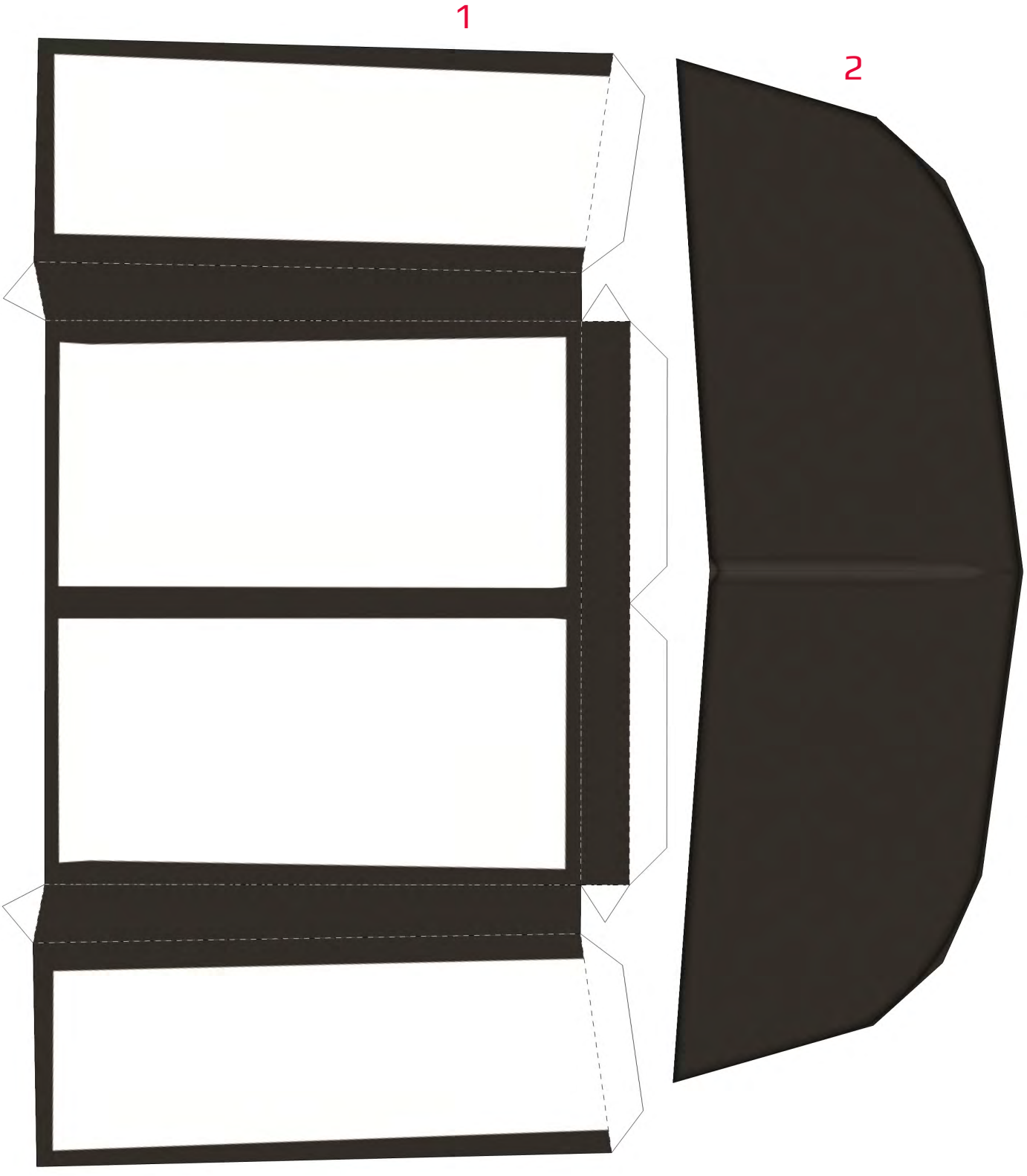

Designed by Taras Lesko. Not for resale or reproduction. © 2013 VisualSpicer.com

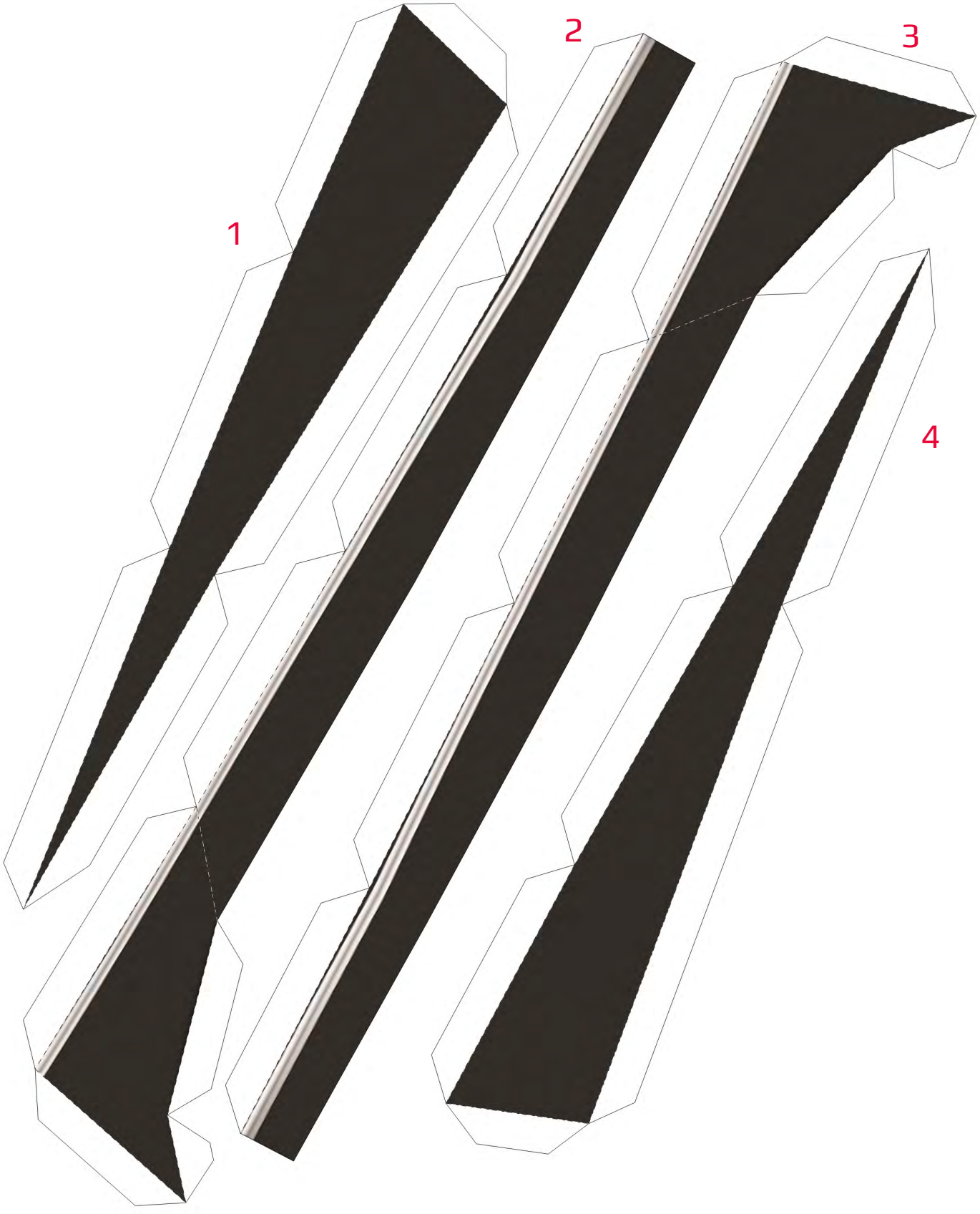

Designed by Taras Lesko. Not for resale or reproduction. © 2013 VisualSpicer.com

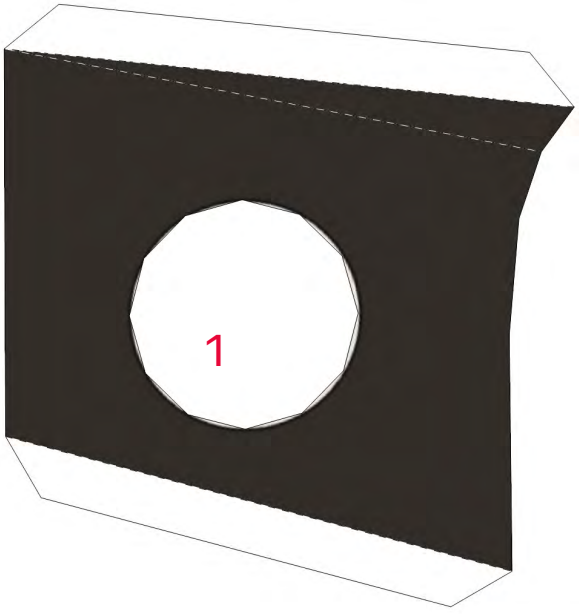

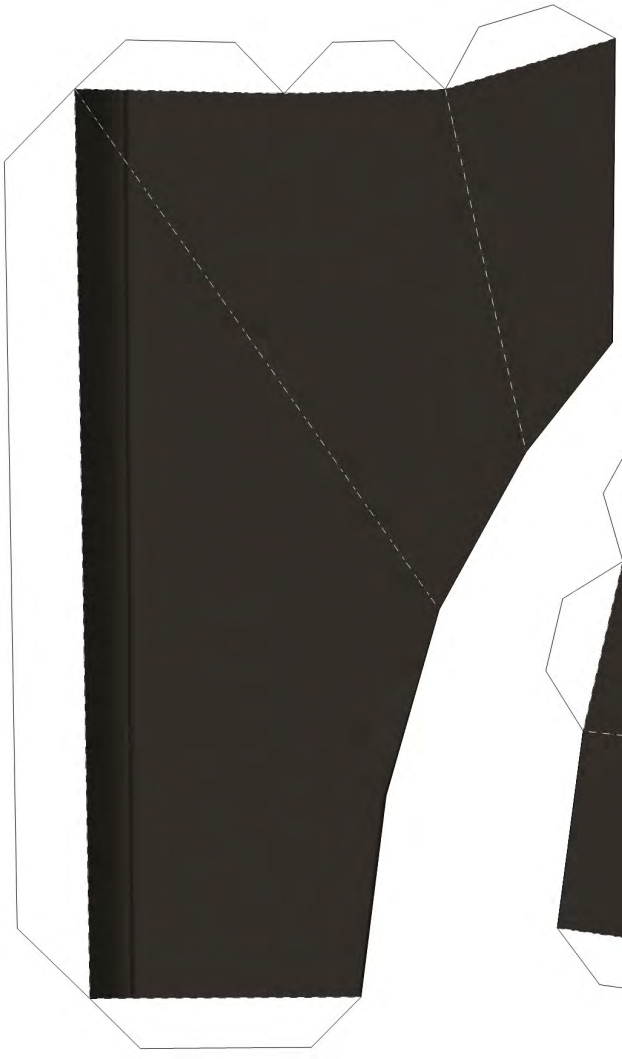

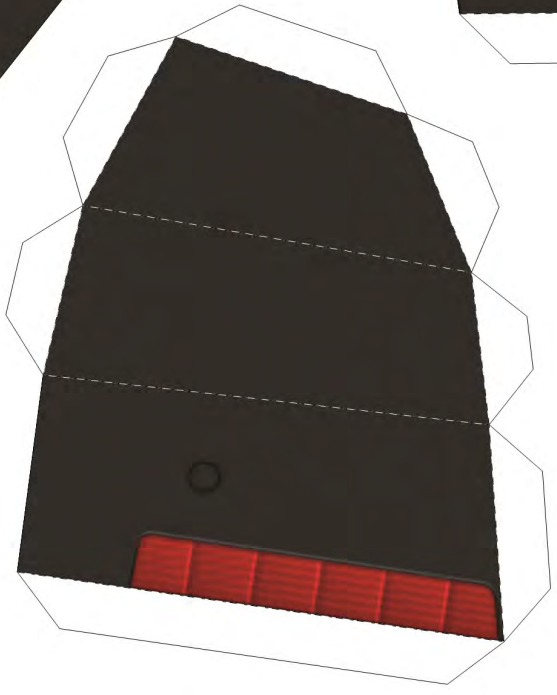

Designed by Taras Lesko. Not for resale or reproduction. © 2013 VisualSpicer.com

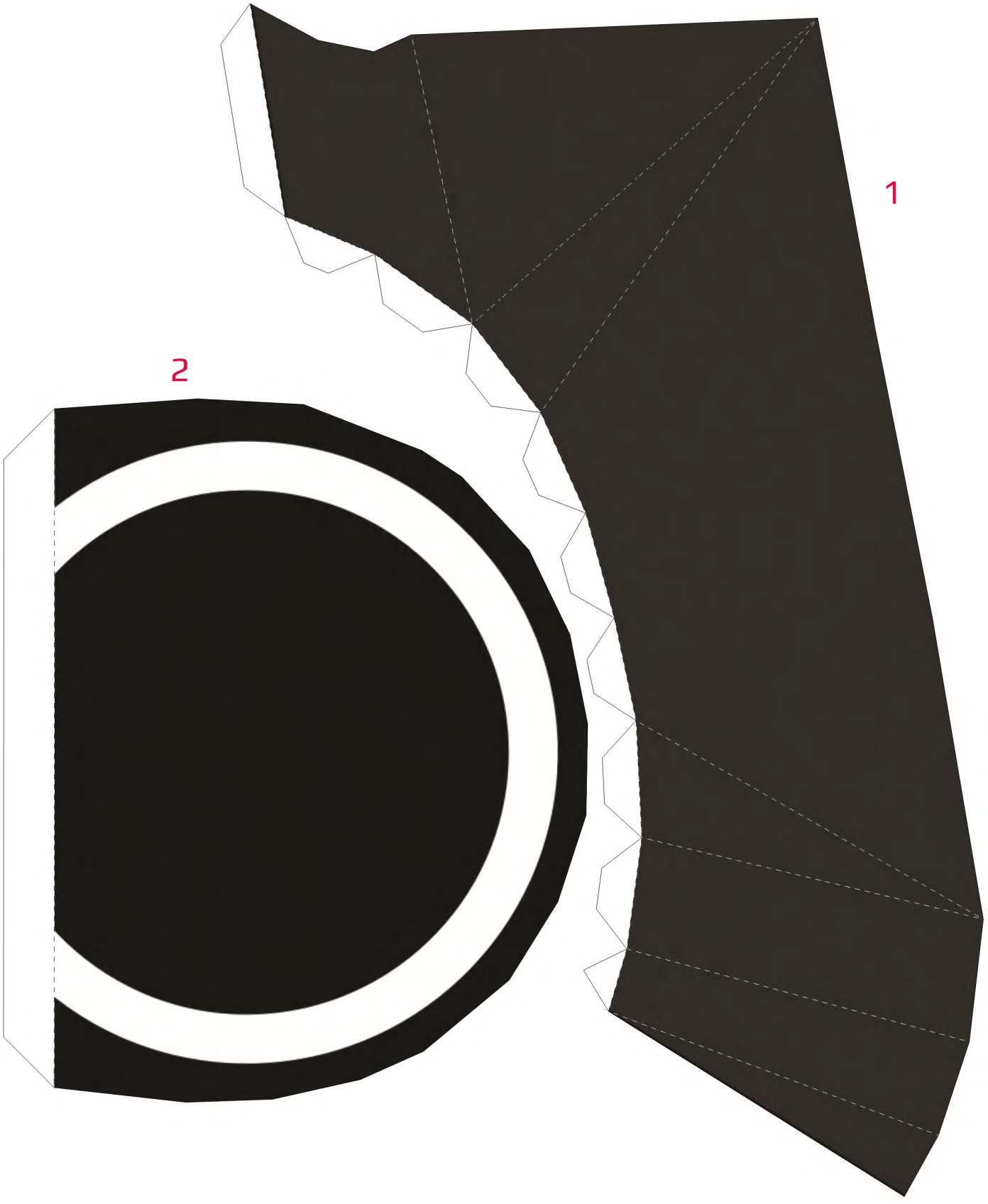

Designed by Taras Lesko. Not for resale or reproduction. © 2013 VisualSpicer.com

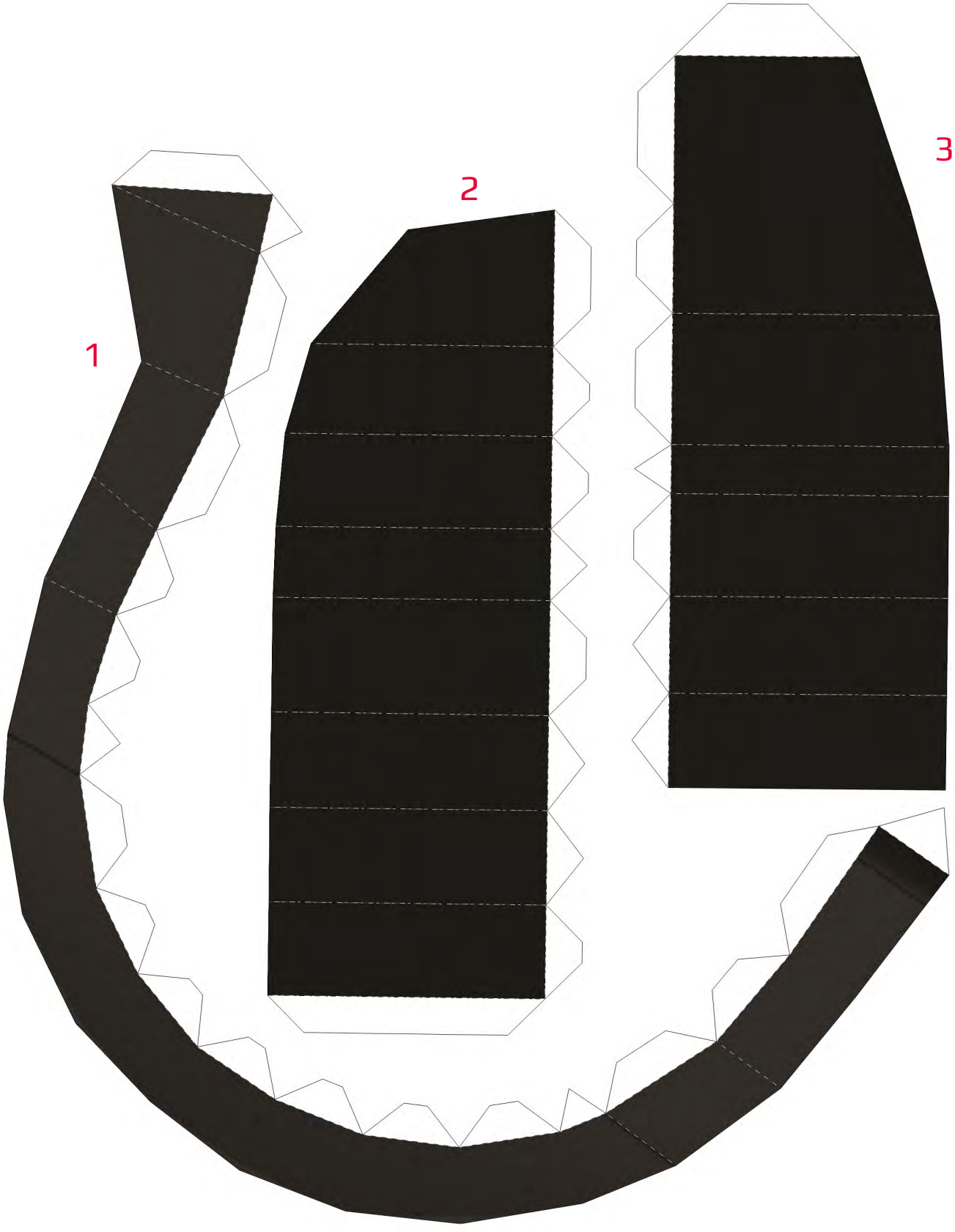

Designed by Taras Lesko. Not for resale or reproduction. © 2013 VisualSpicer.com

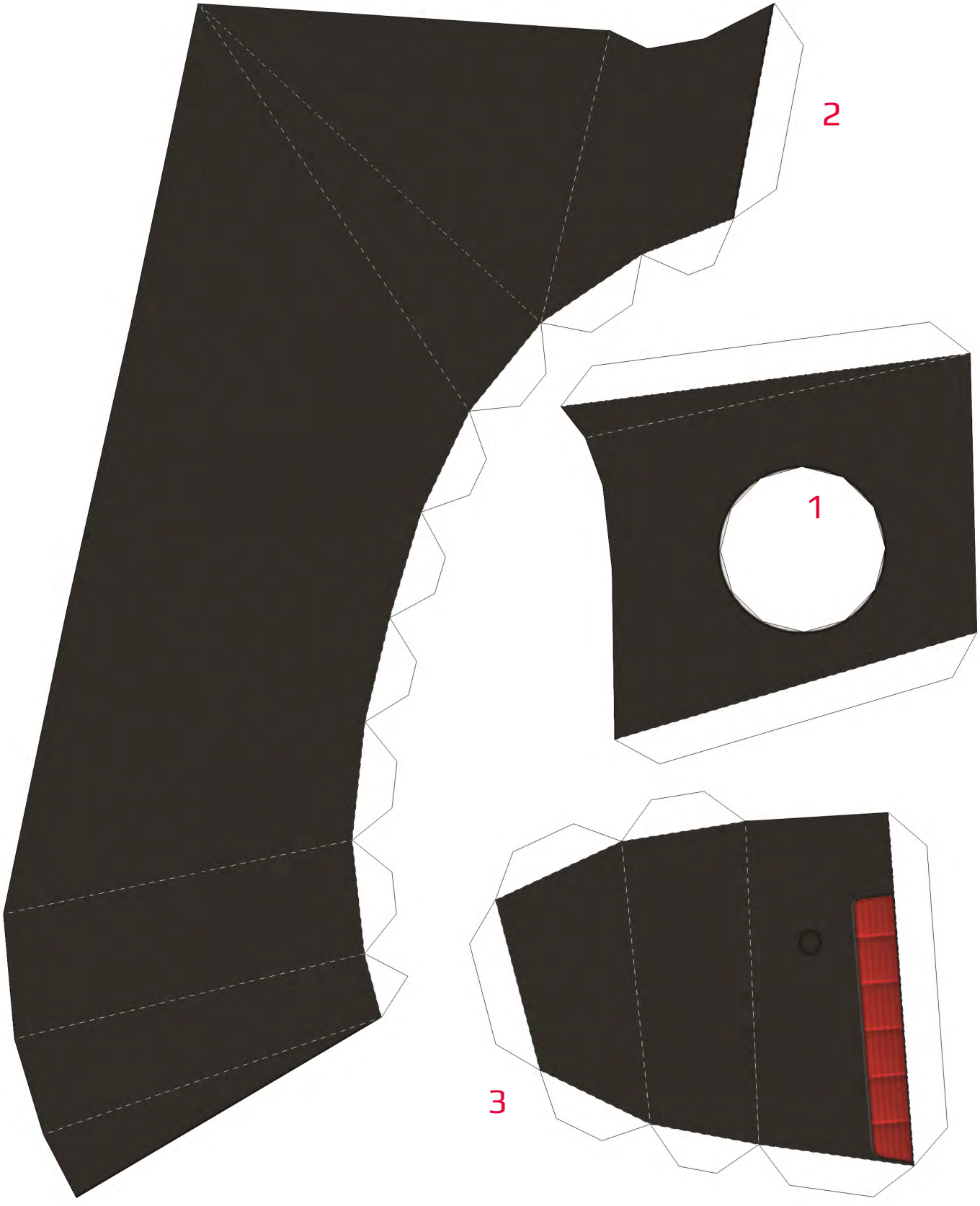

Designed by Taras Lesko. Not for resale or reproduction. © 2013 VisualSpicer.com

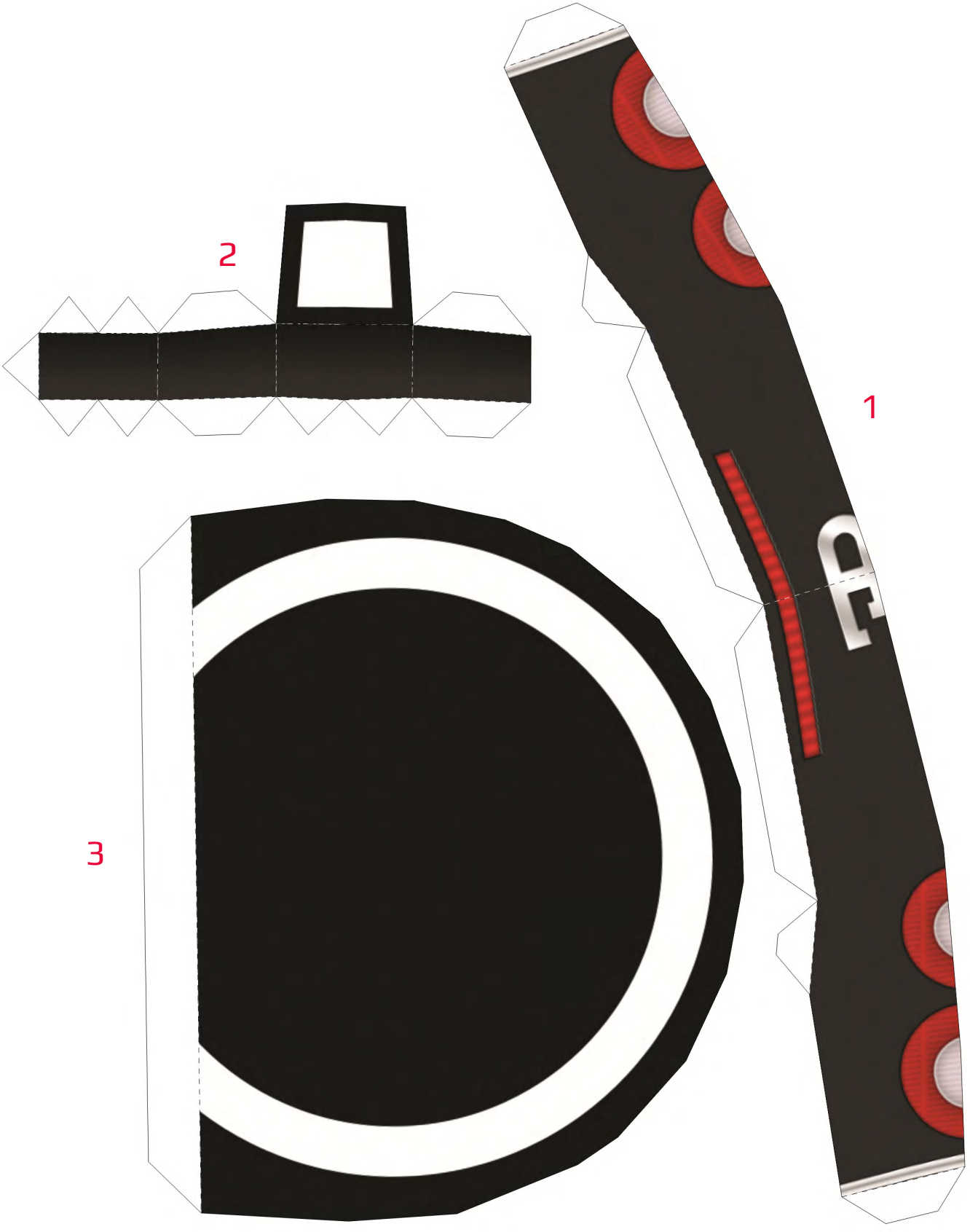

Designed by Taras Lesko. Not for resale or reproduction. © 2013 VisualSpicer.com

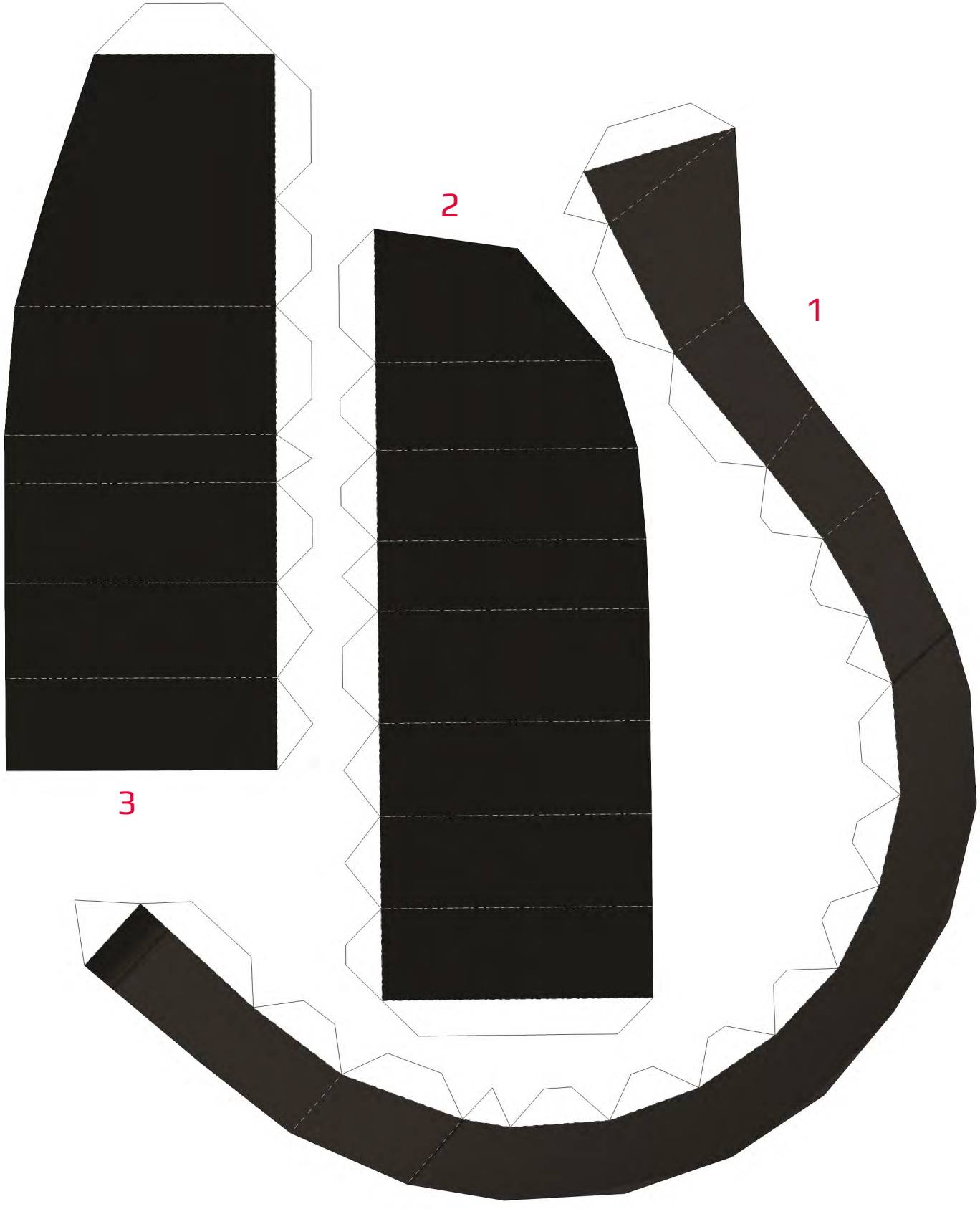

Designed by Taras Lesko. Not for resale or reproduction. © 2013 VisualSpicer.com

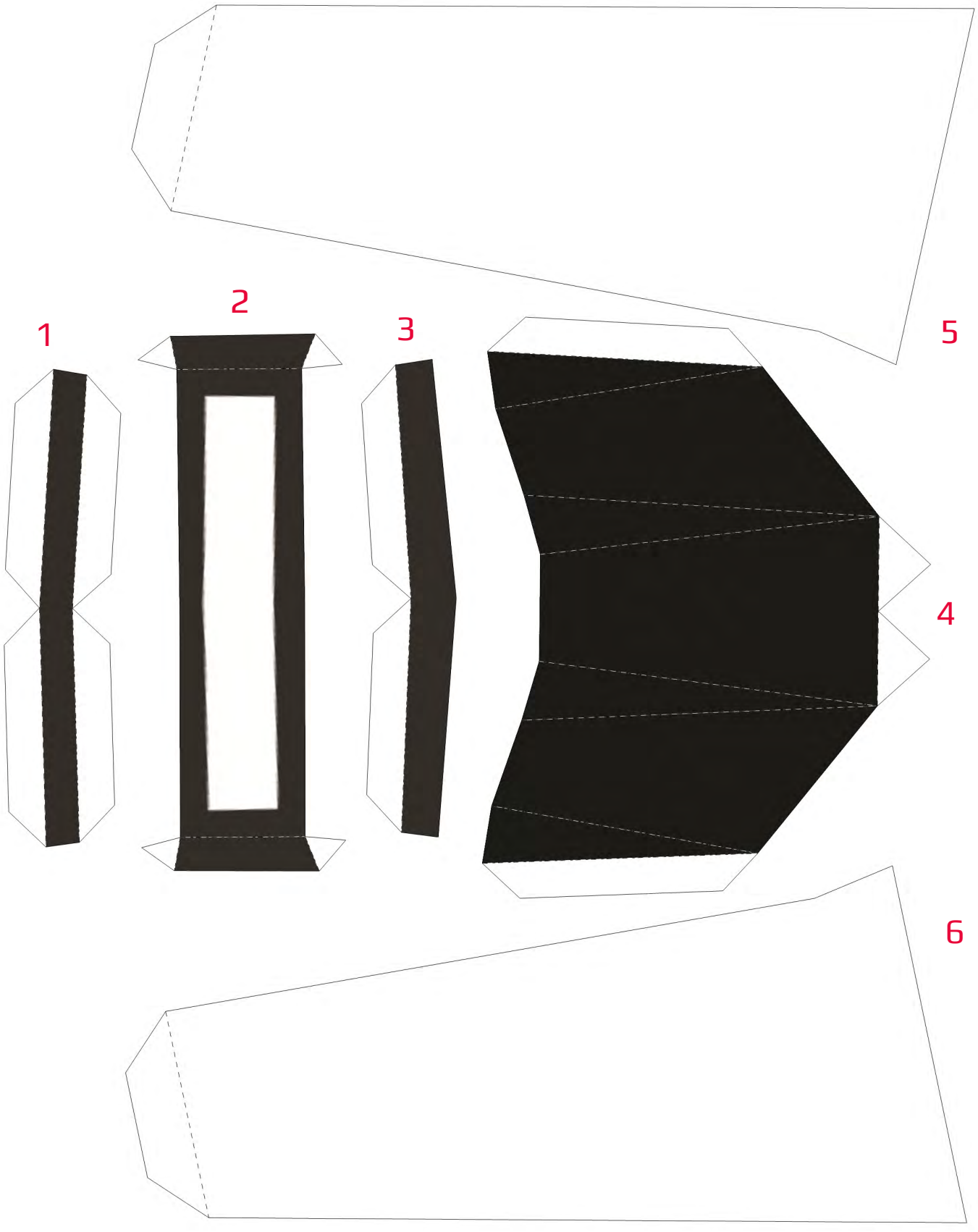

Designed by Taras Lesko. Not for resale or reproduction. © 2013 VisualSpicer.com

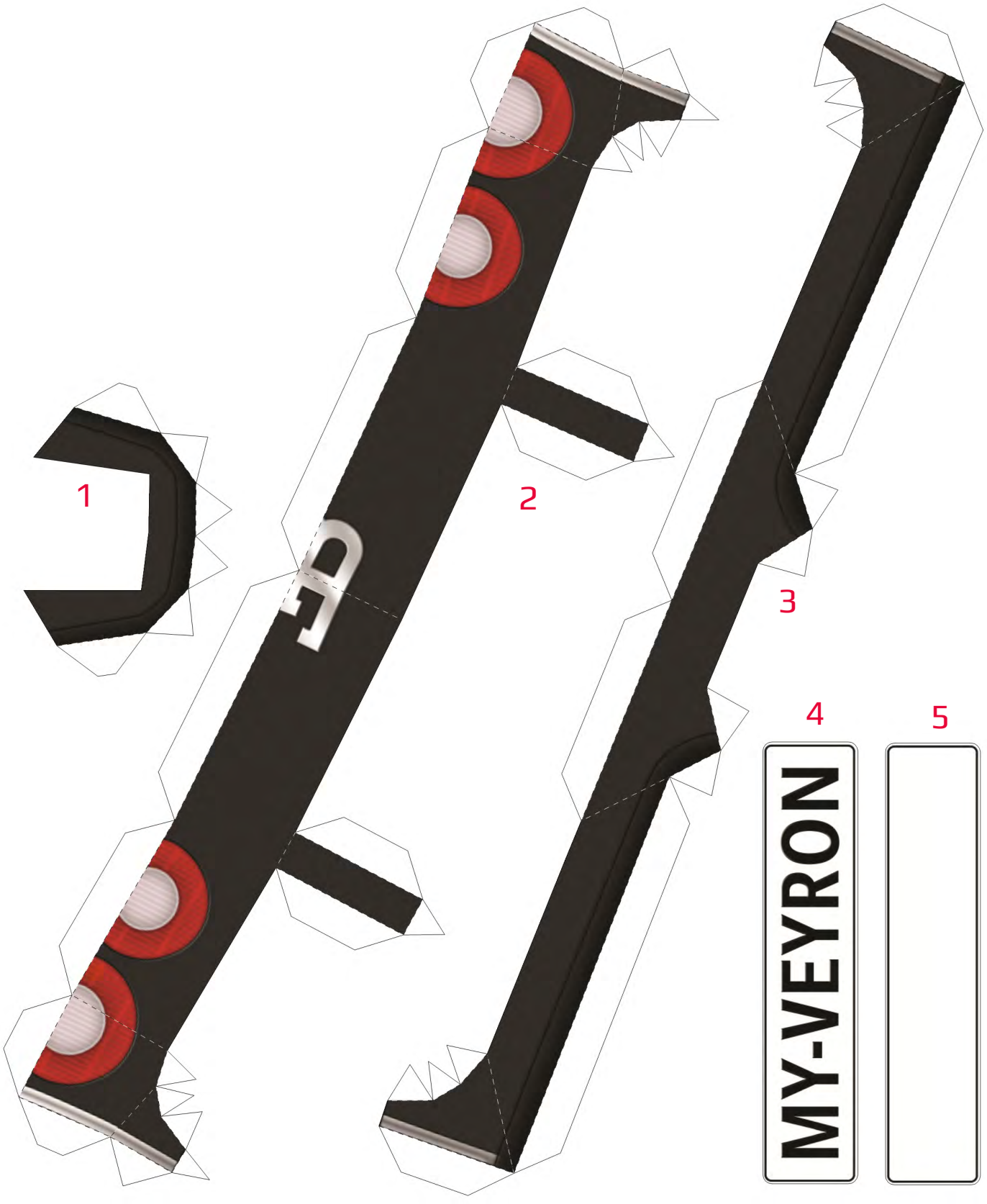

Designed by Taras Lesko. Not for resale or reproduction. © 2013 VisualSpicer.com

Designed by Taras Lesko. Not for resale or reproduction. © 2013 VisualSpicer.com

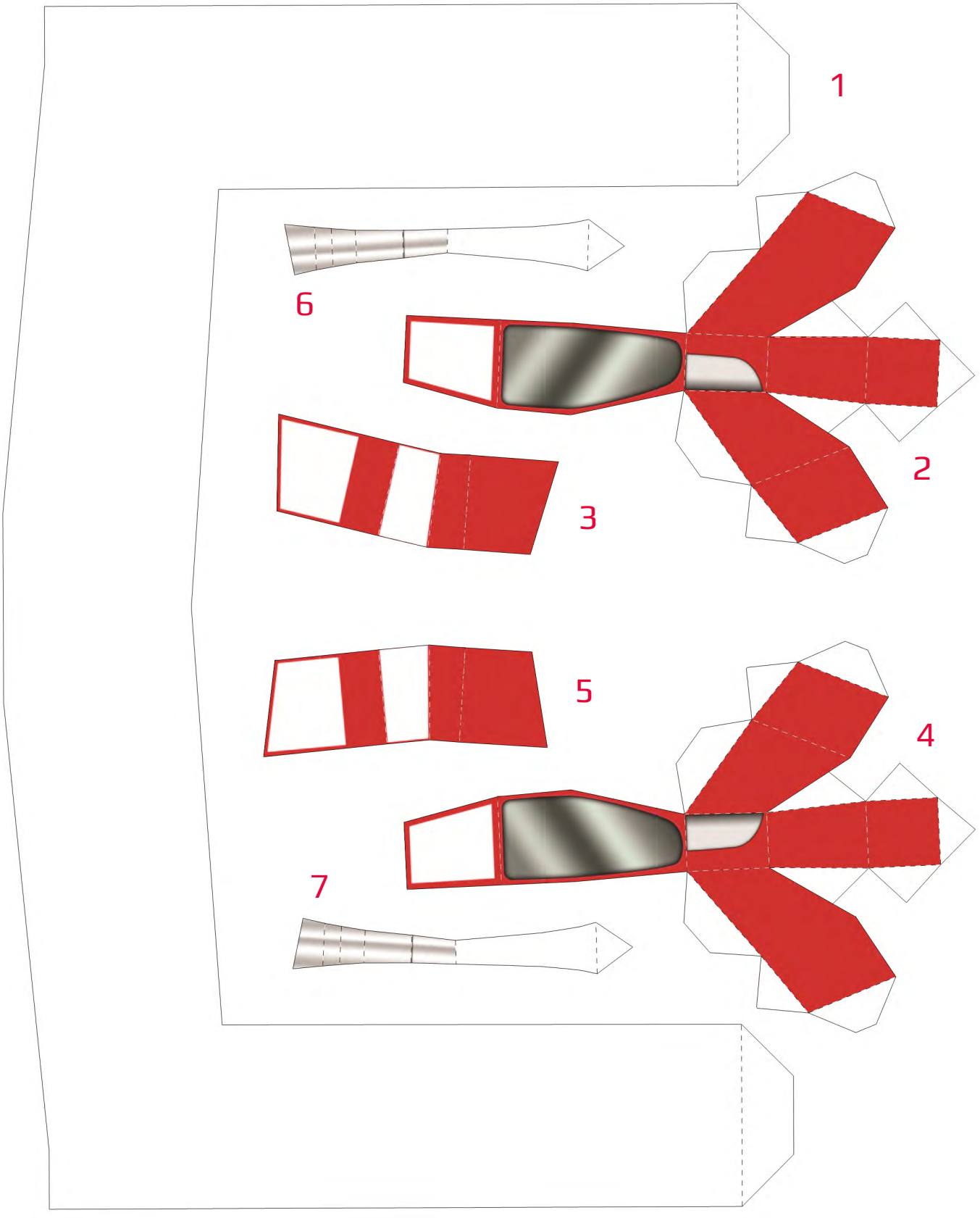

Designed by Taras Lesko. Not for resale or reproduction. © 2013 VisualSpicer.com

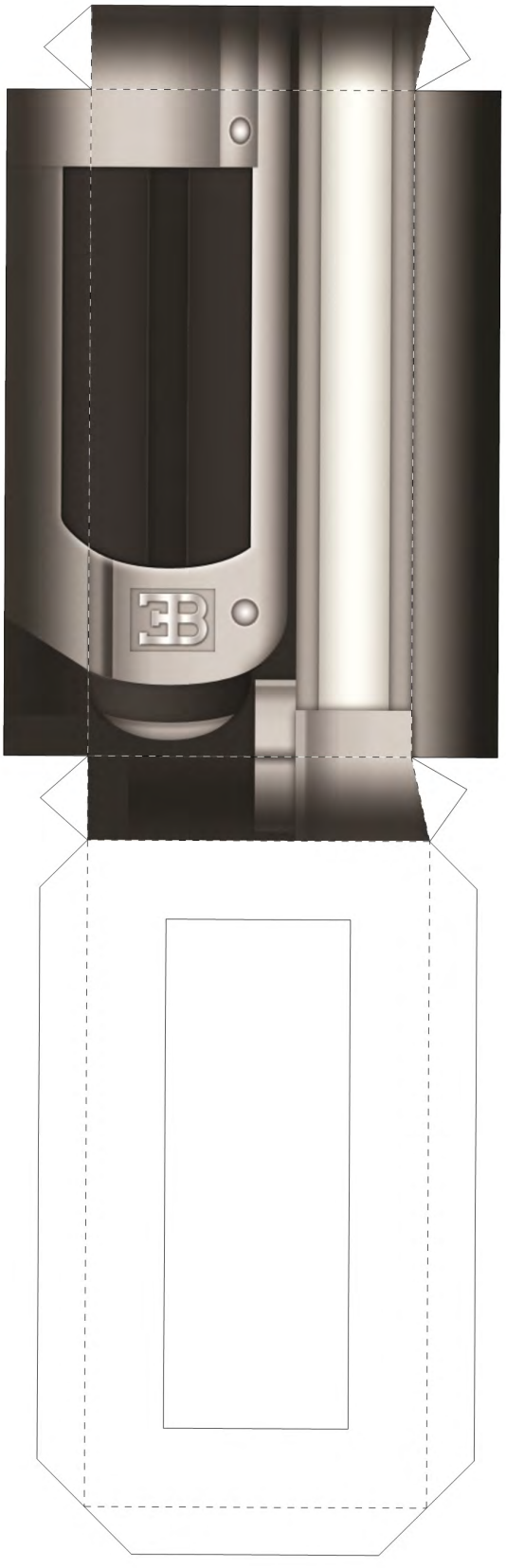

1

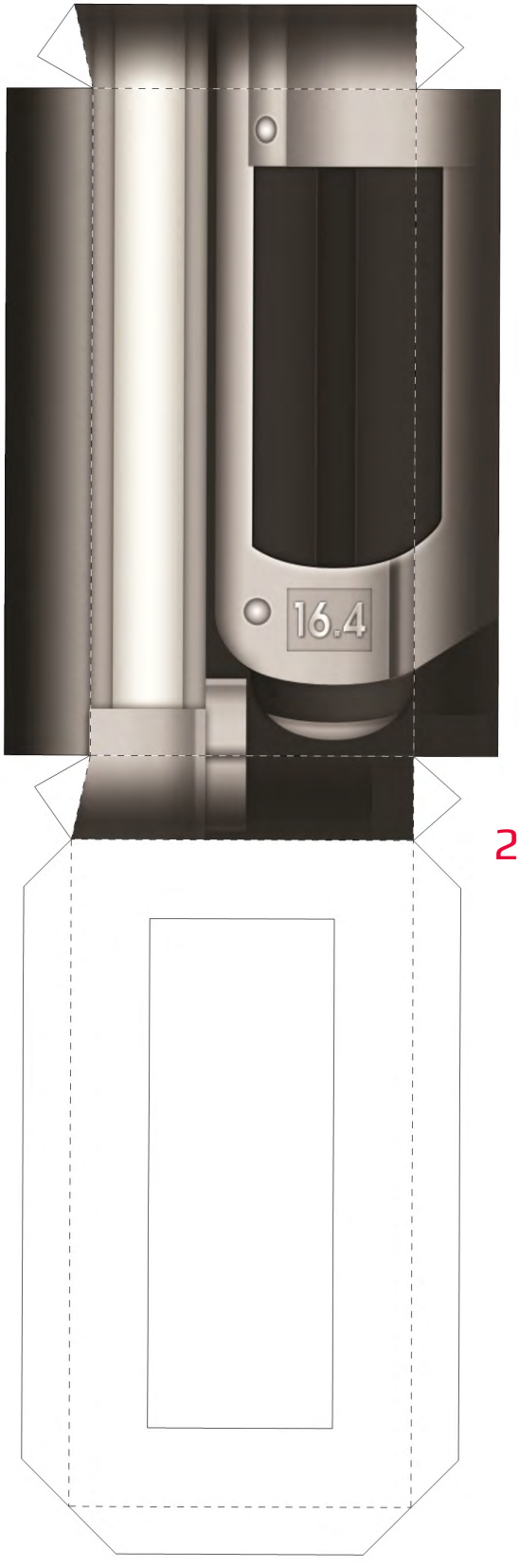

2

Designed by Taras Lesko. Not for resale or reproduction. © 2013 VisualSpicer.com

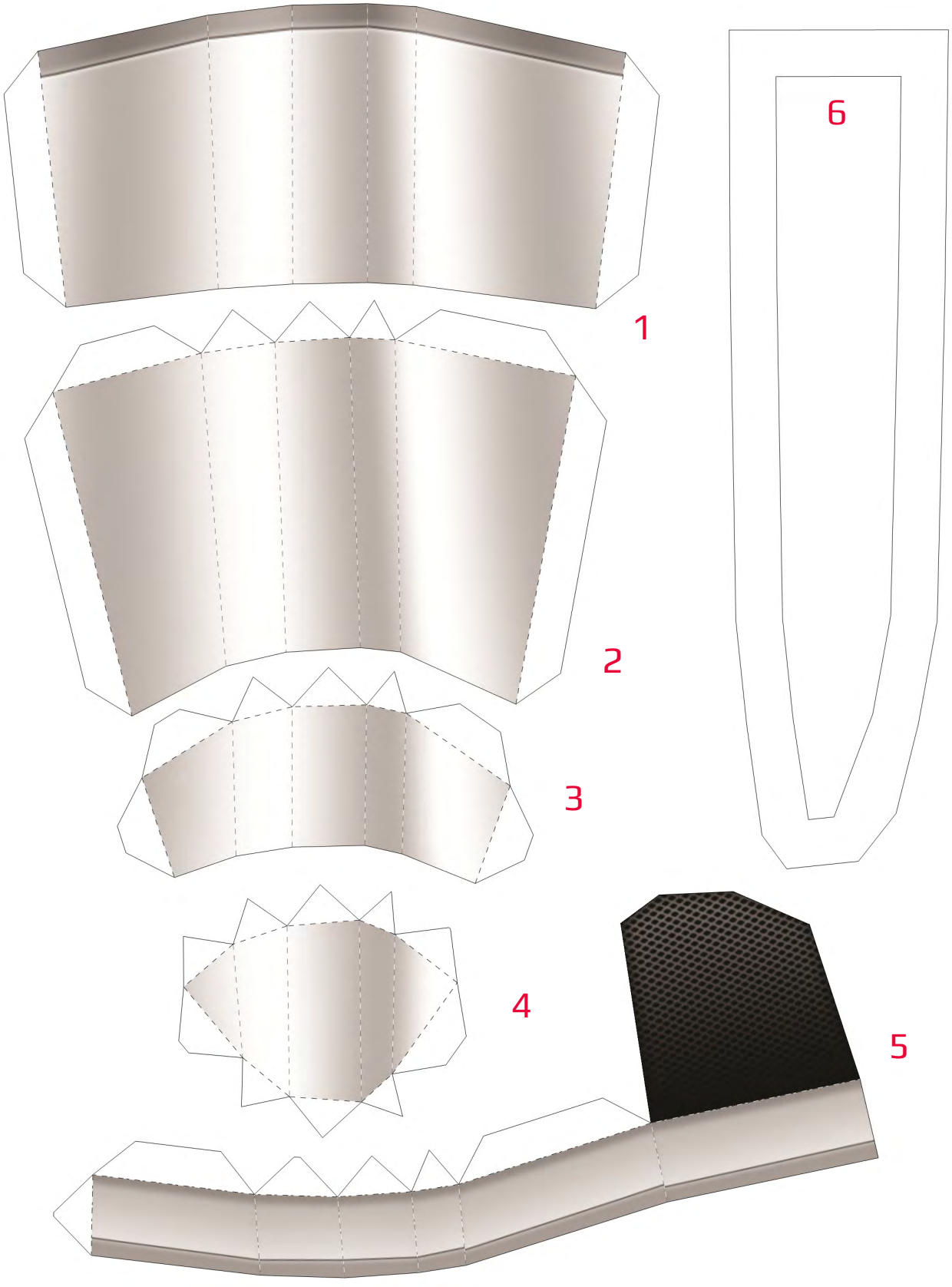

Designed by Taras Lesko. Not for resale or reproduction. © 2013 VisualSpicer.com

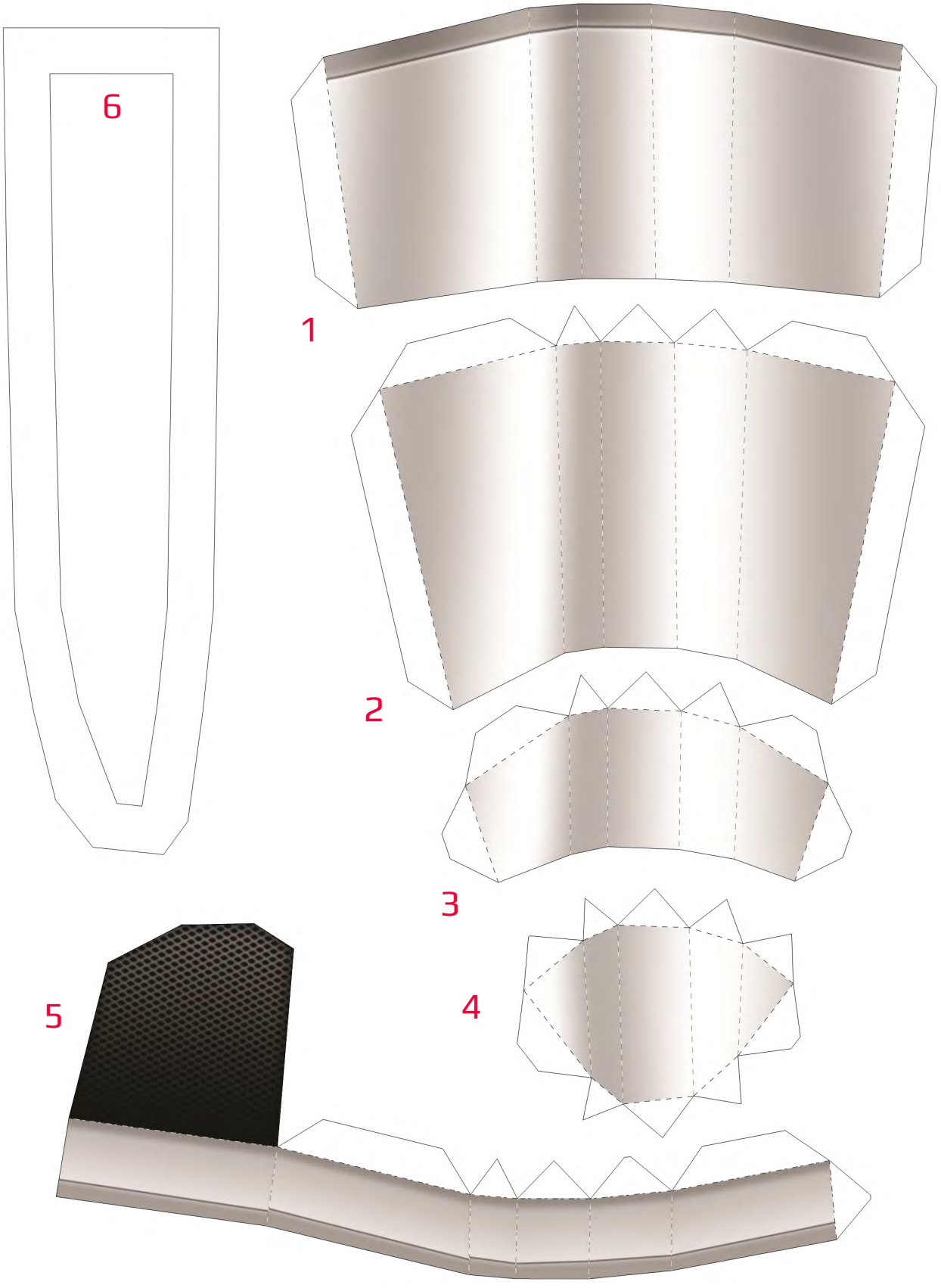

Designed by Taras Lesko. Not for resale or reproduction. © 2013 VisualSpicer.com

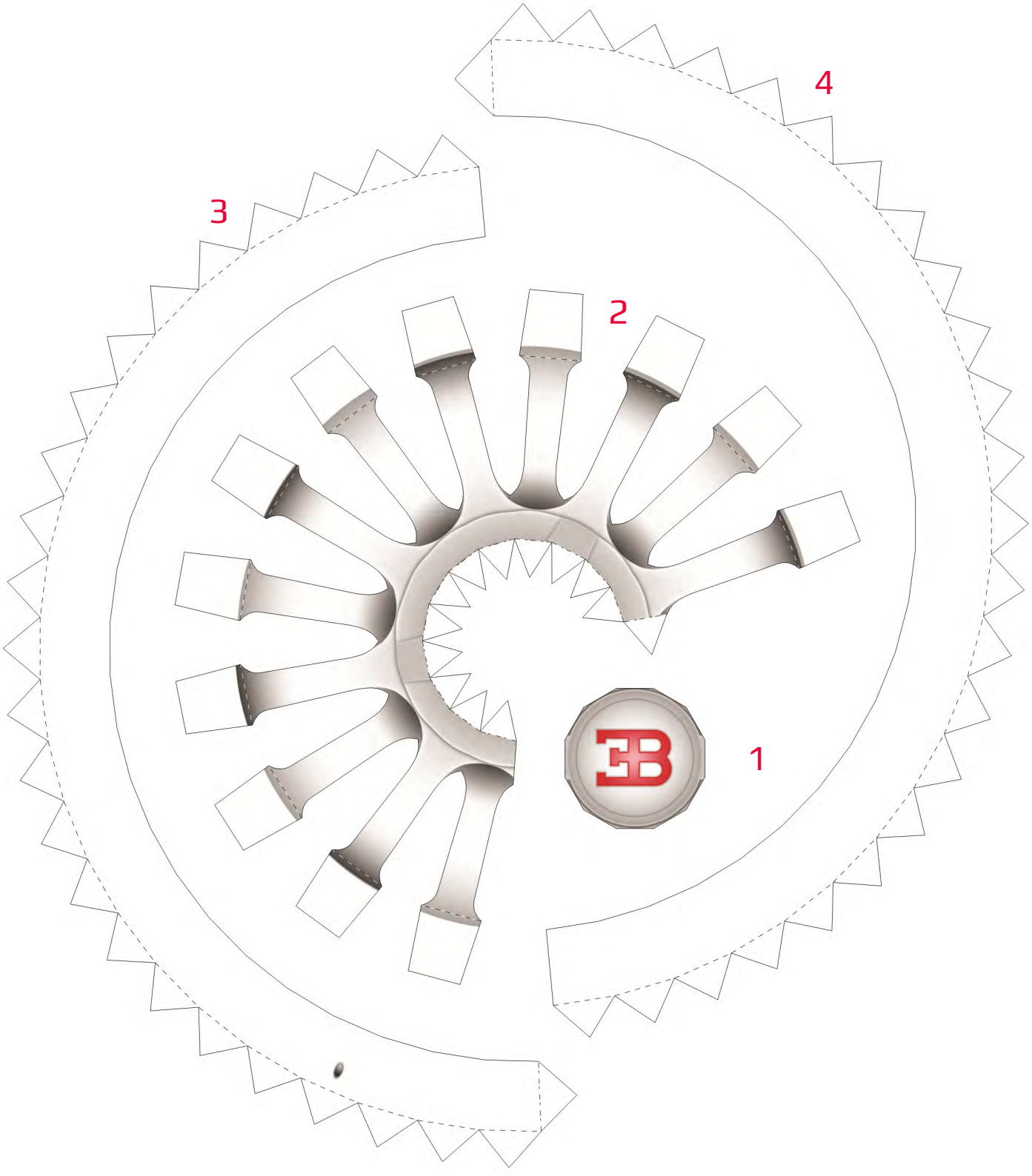

Designed by Taras Lesko. Not for resale or reproduction. © 2013 VisualSpicer.com

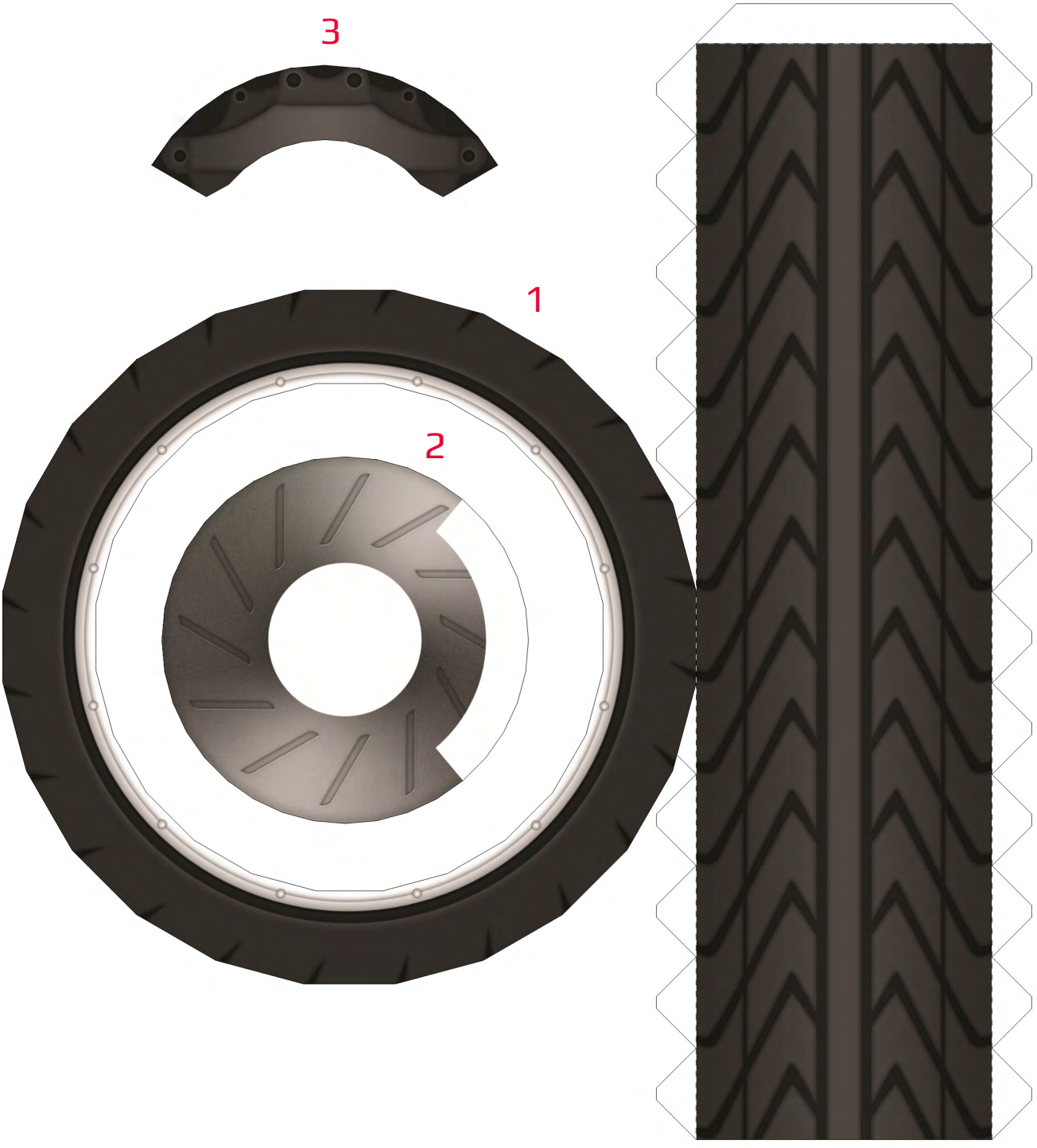

Designed by Taras Lesko. Not for resale or reproduction. © 2013 VisualSpicer.com

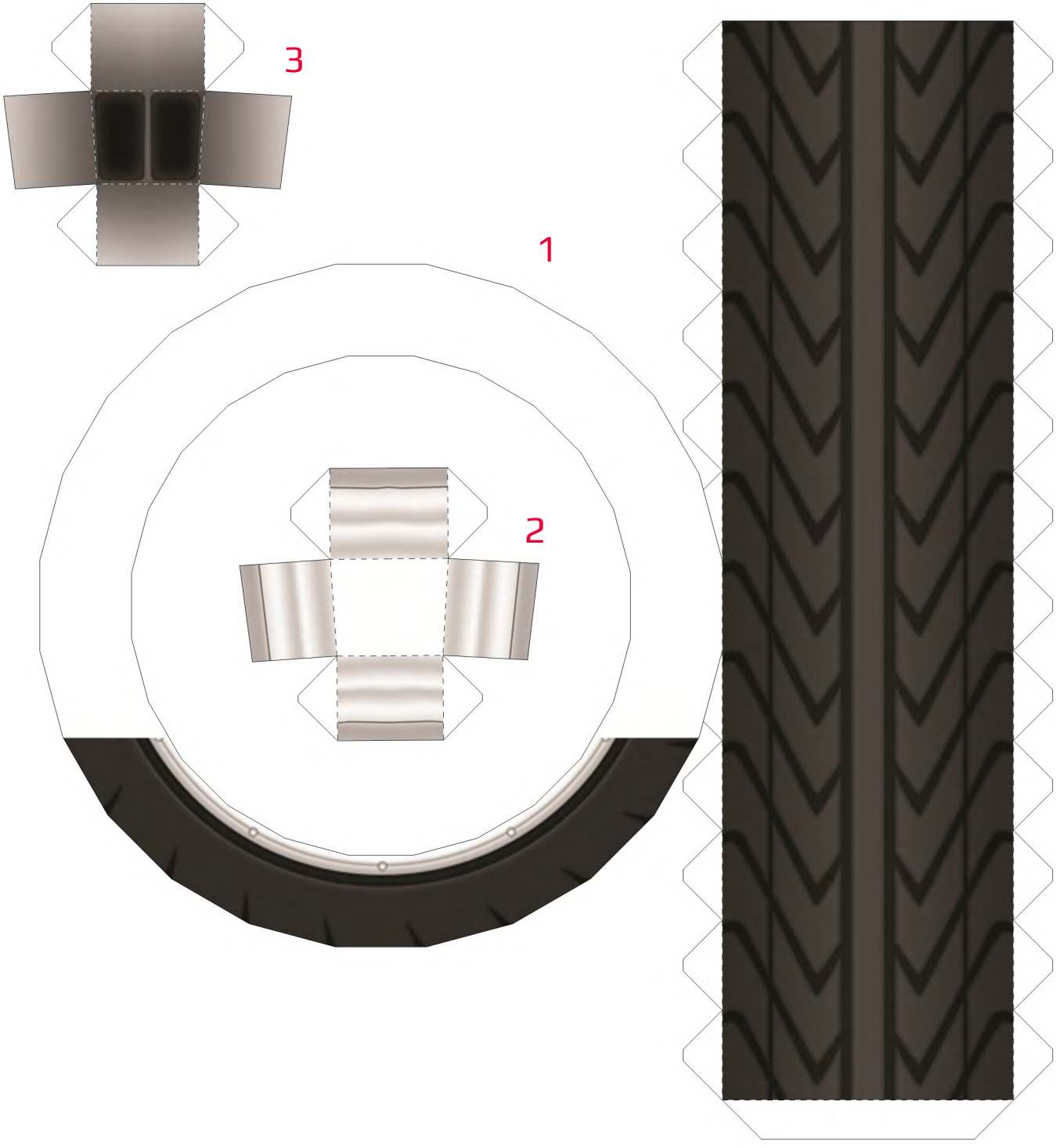

Designed by Taras Lesko. Not for resale or reproduction. © 2013 VisualSpicer.com

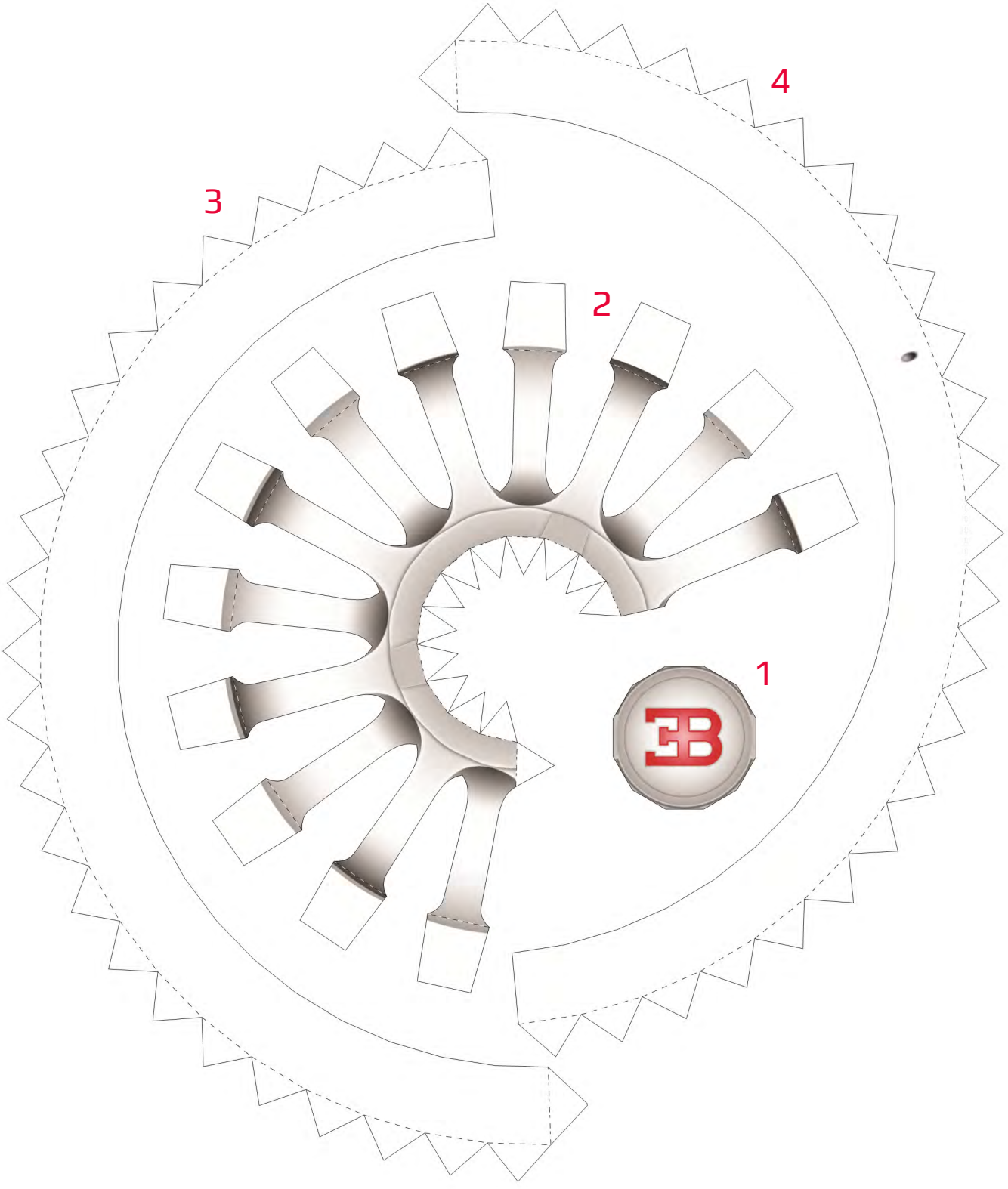

Designed by Taras Lesko. Not for resale or reproduction. © 2013 VisualSpicer.com

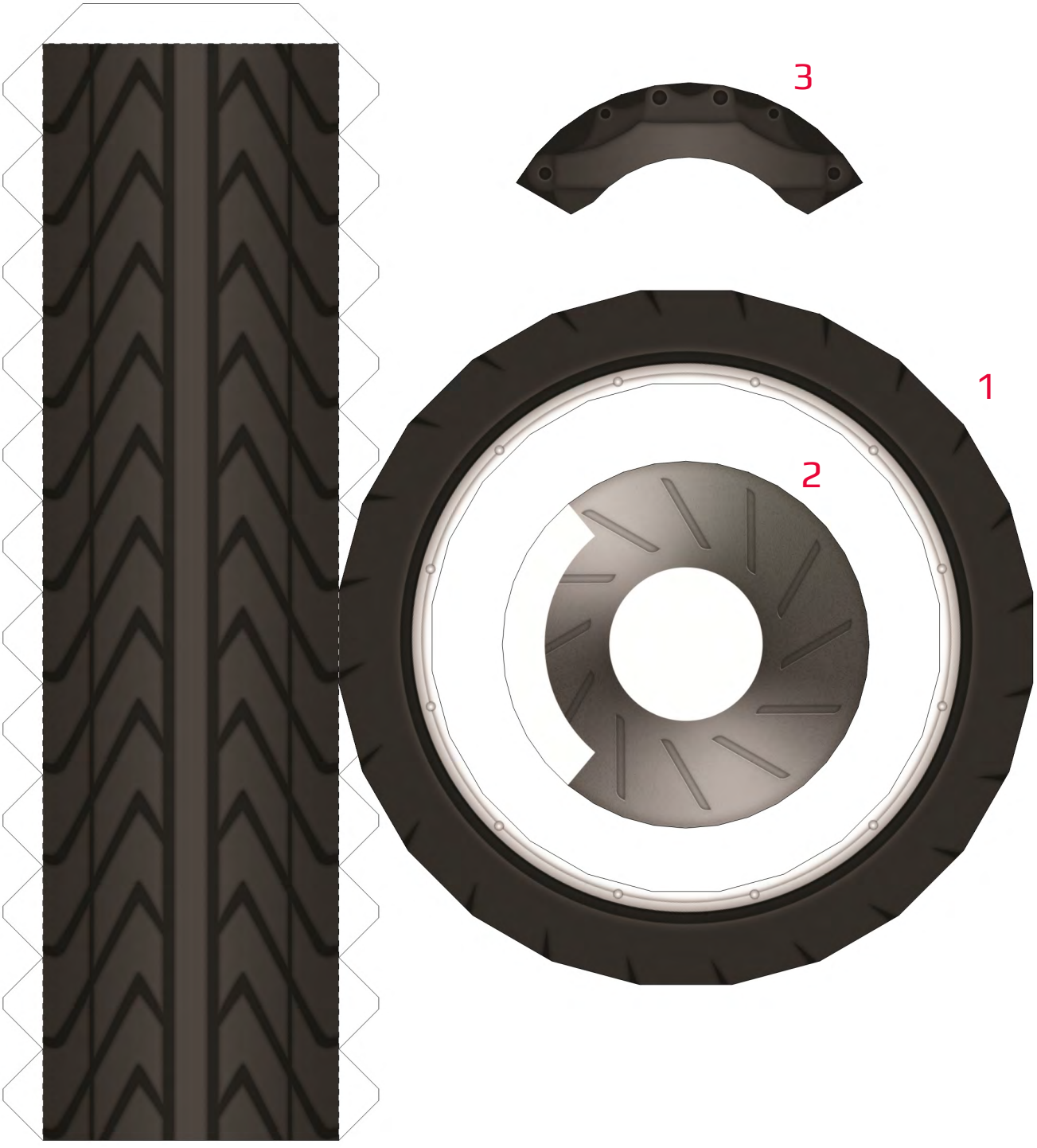

Designed by Taras Lesko. Not for resale or reproduction. © 2013 VisualSpicer.com

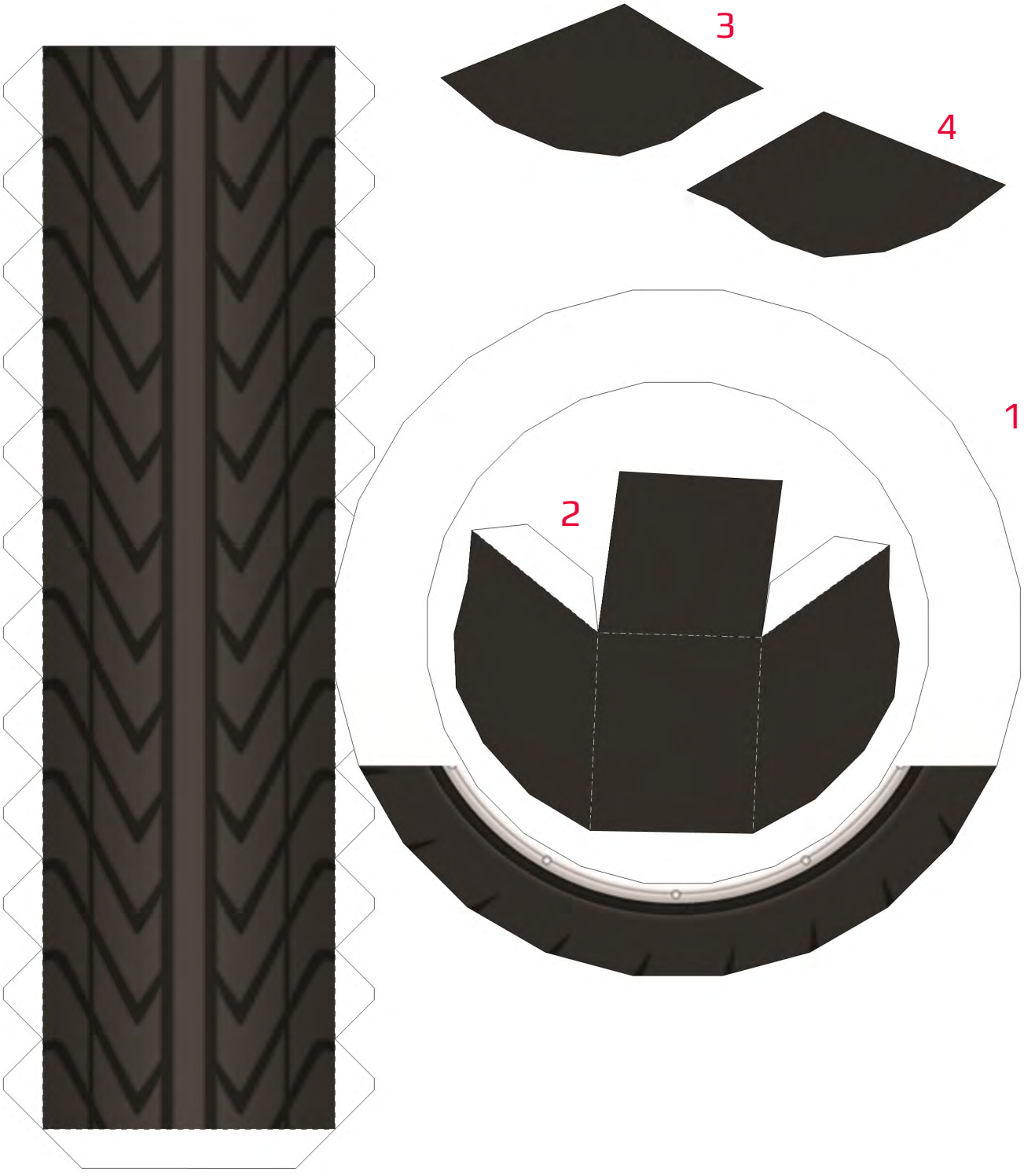

Designed by Taras Lesko. Not for resale or reproduction. © 2013 VisualSpicer.com

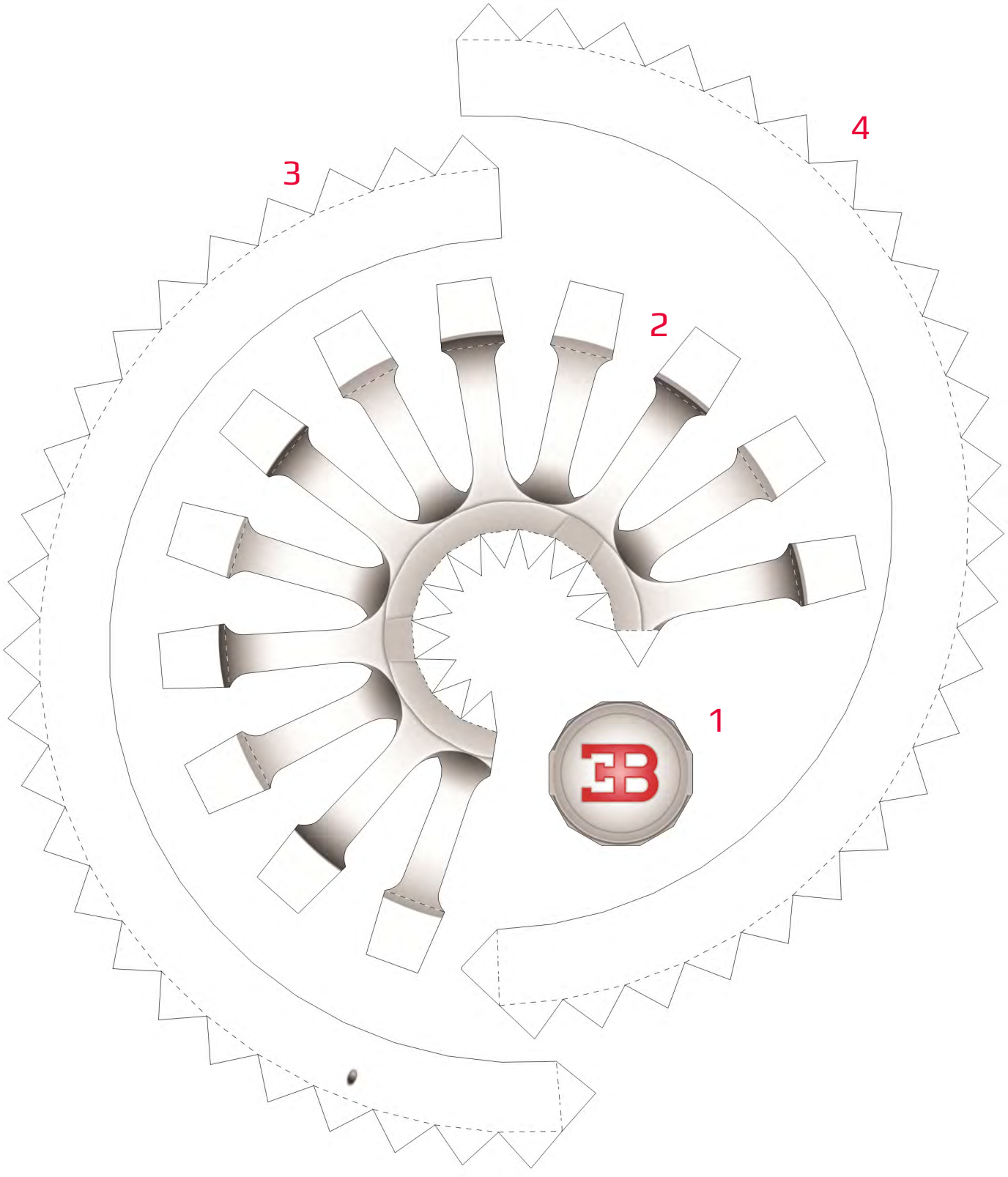

Designed by Taras Lesko. Not for resale or reproduction. © 2013 VisualSpicer.com

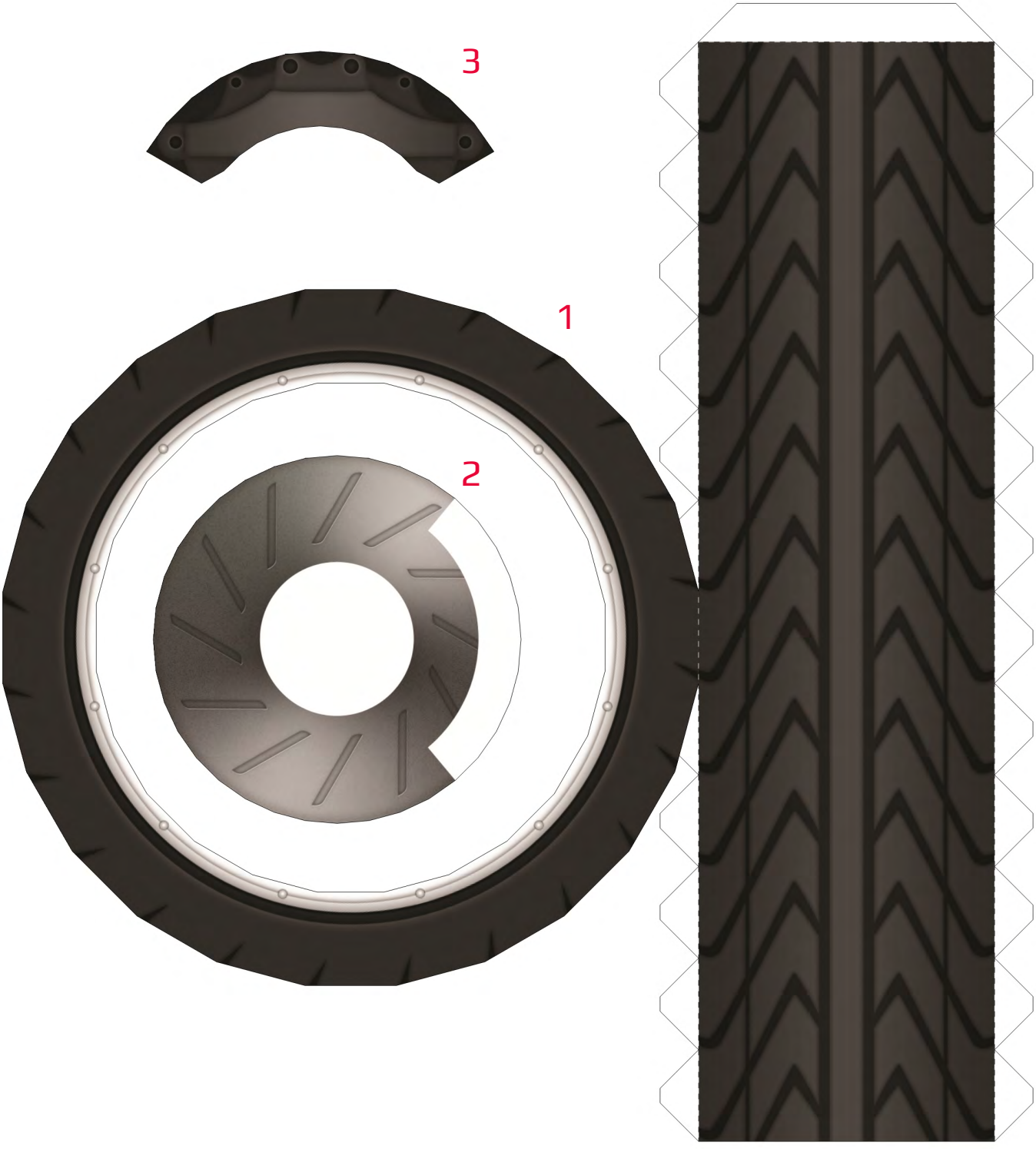

Designed by Taras Lesko. Not for resale or reproduction. © 2013 VisualSpicer.com

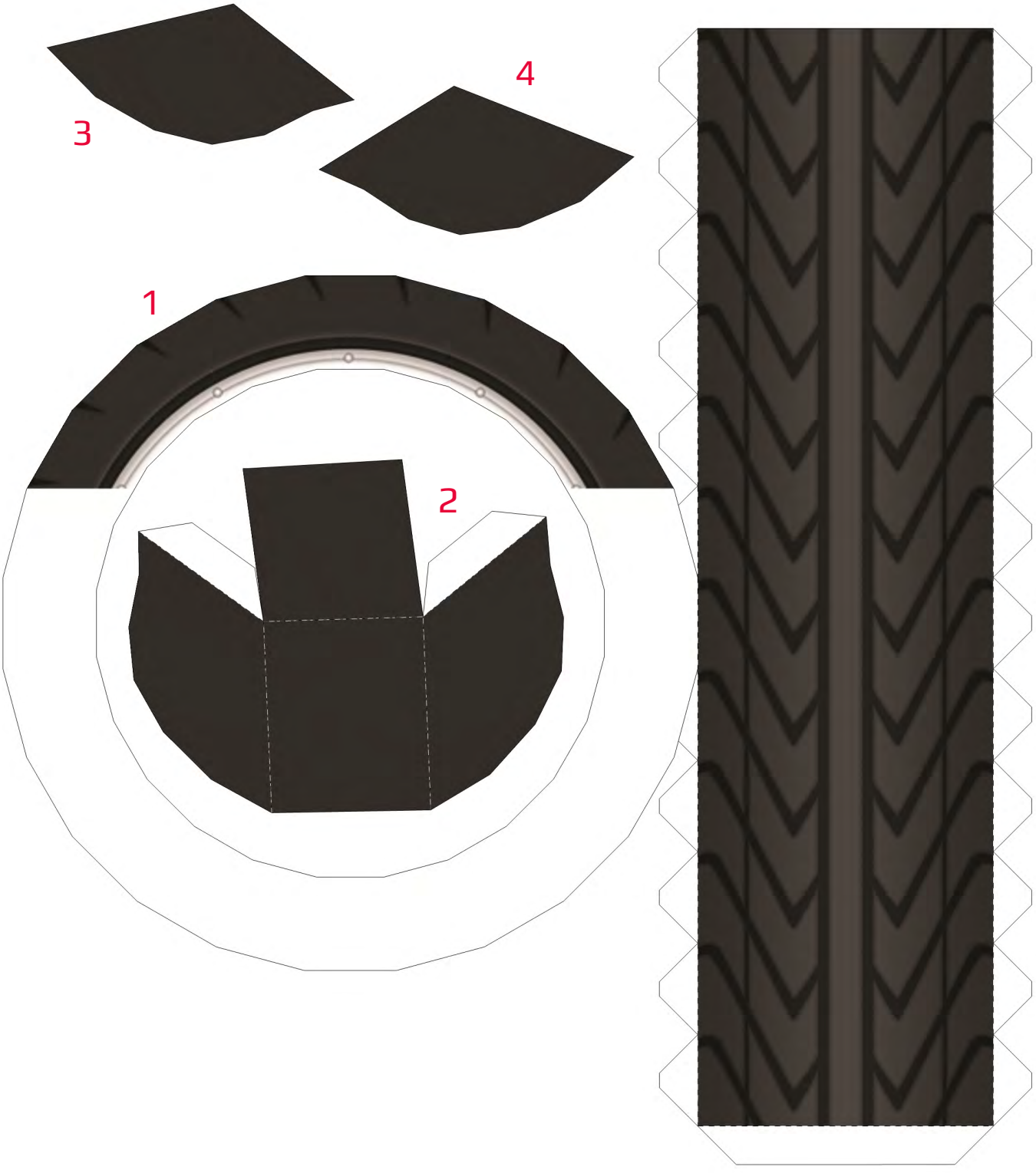

Designed by Taras Lesko. Not for resale or reproduction. © 2013 VisualSpicer.com

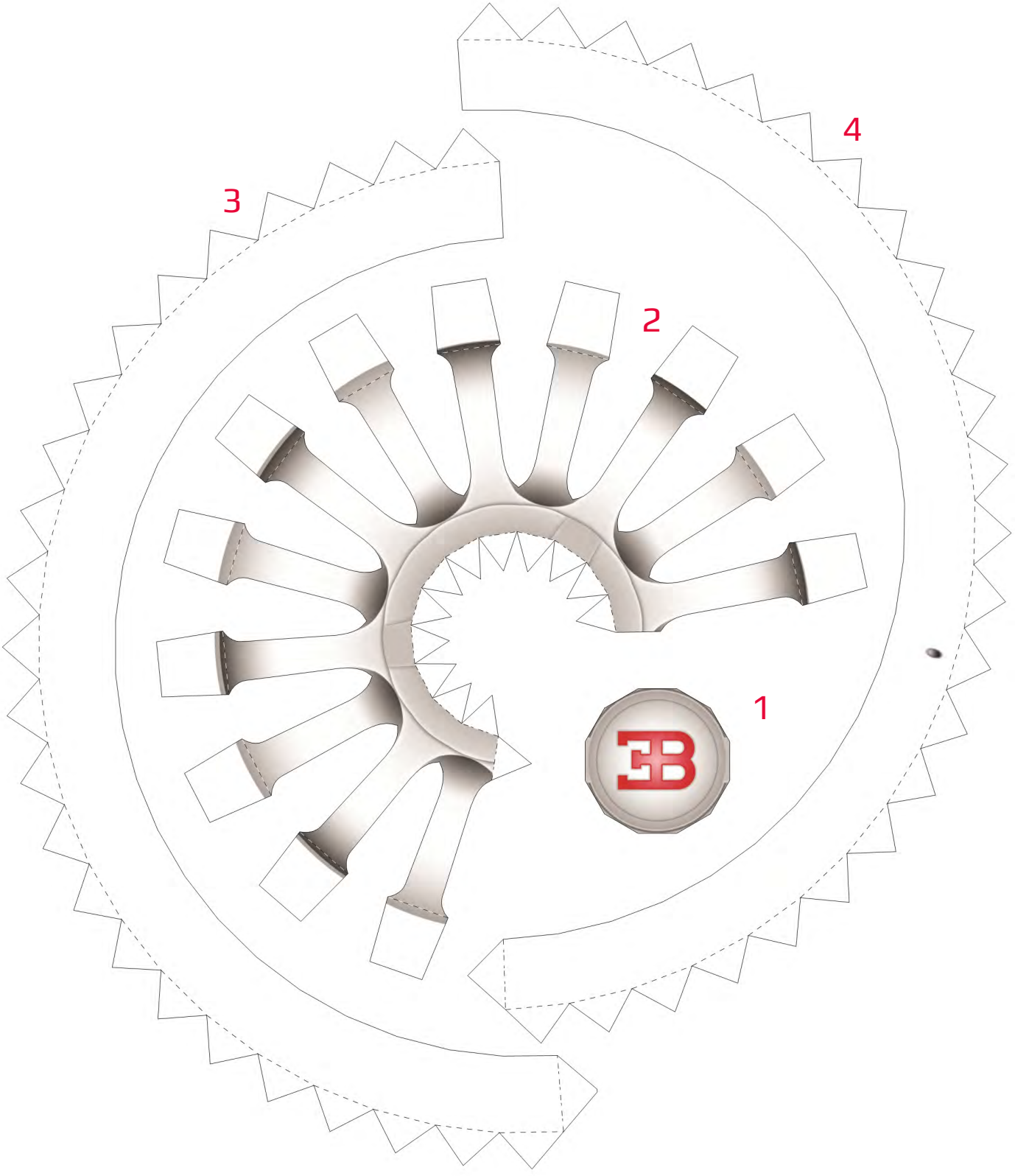

Designed by Taras Lesko. Not for resale or reproduction. © 2013 VisualSpicer.com

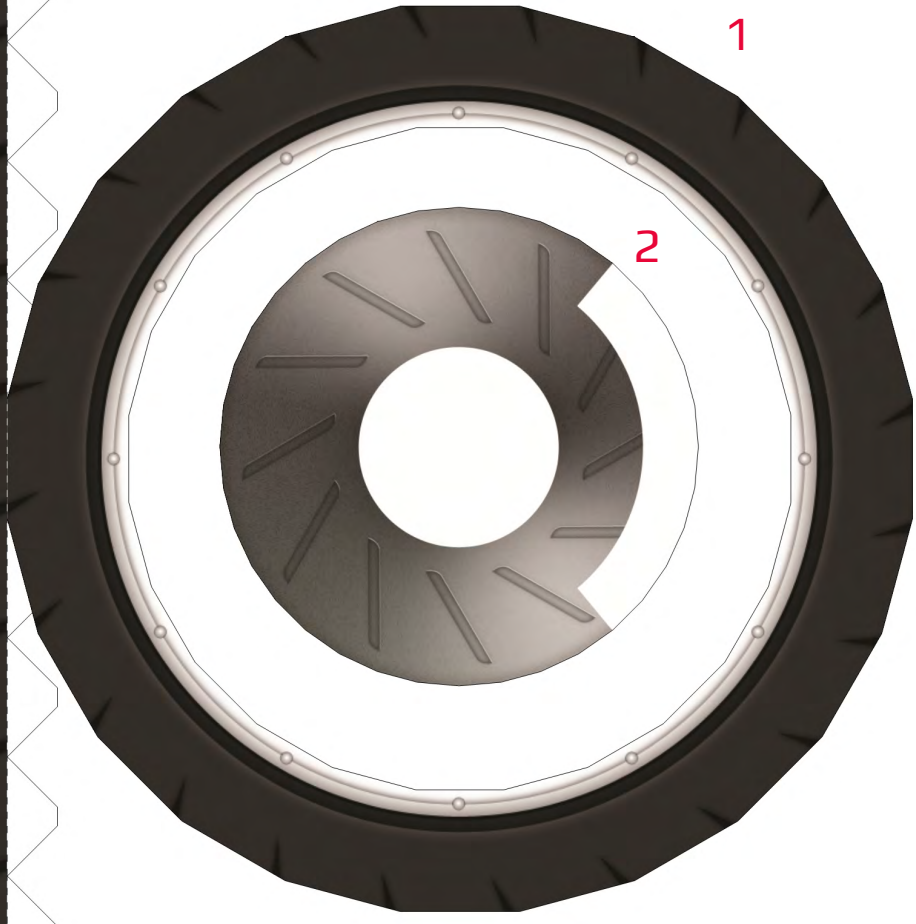

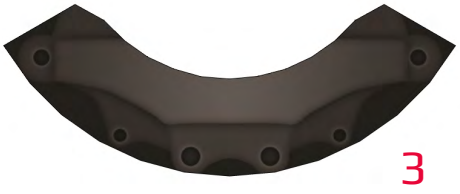

Designed by Taras Lesko. Not for resale or reproduction. © 2013 VisualSpicer.com

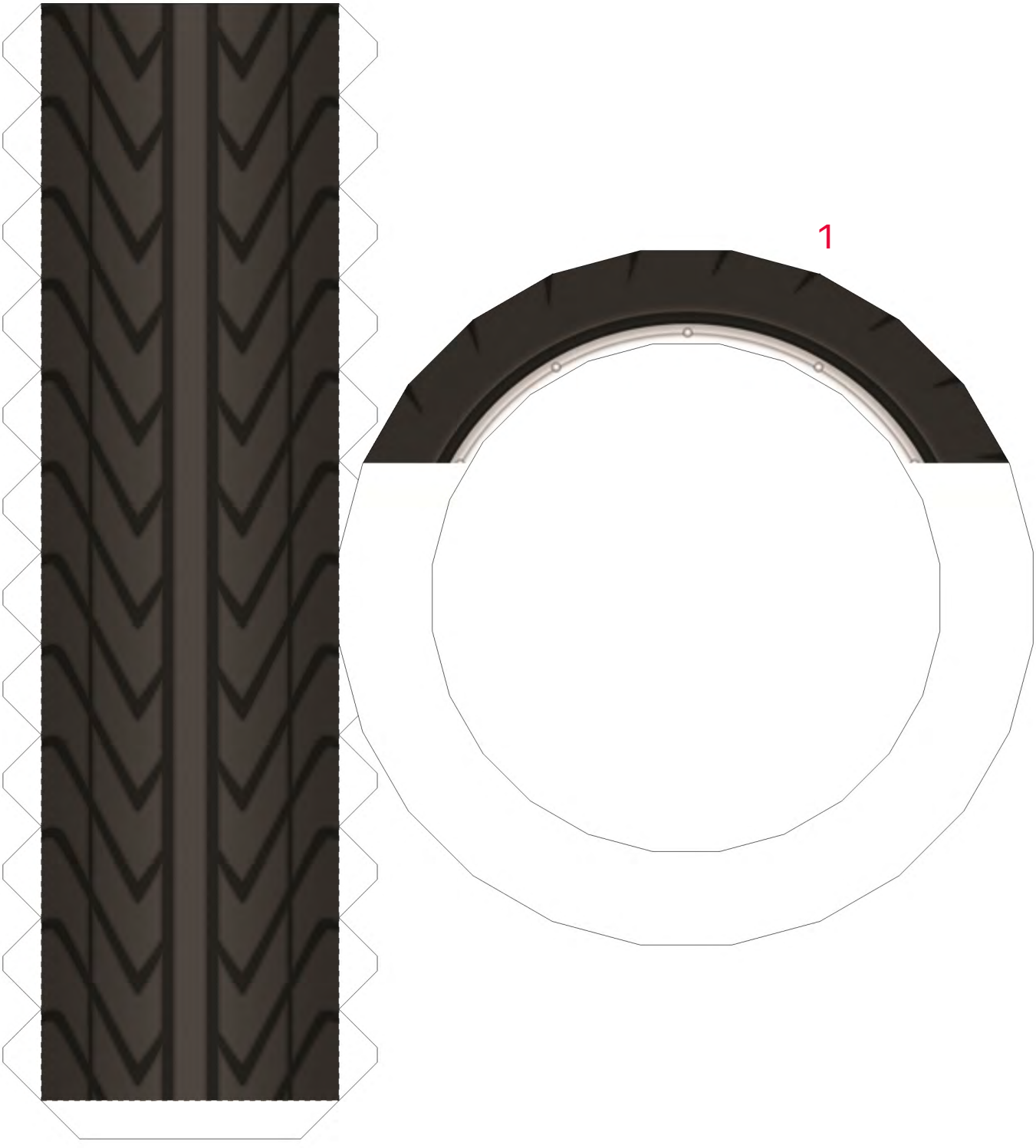

Designed by Taras Lesko. Not for resale or reproduction. © 2013 VisualSpicer.com

INSTRUCTIONS

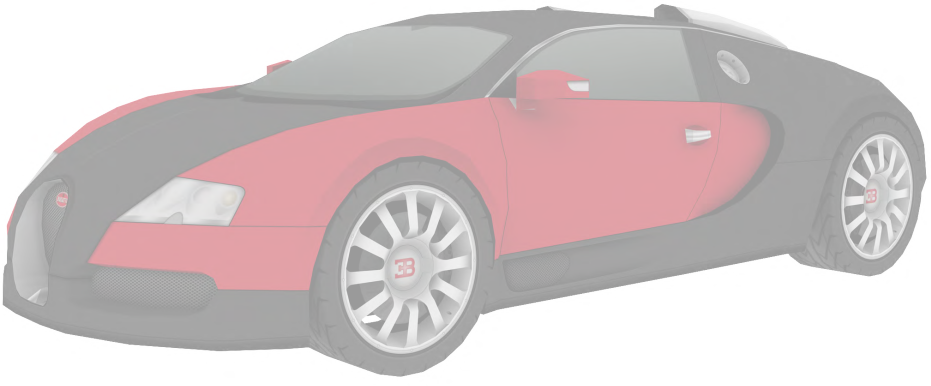

Designed by Taras Lesko. Not for resale or reproduction. © 2013 VisualSpicer.com

TEMPLATES
PAGE NUMBER

TEMPLATES
PART NUMBER

-

1

2

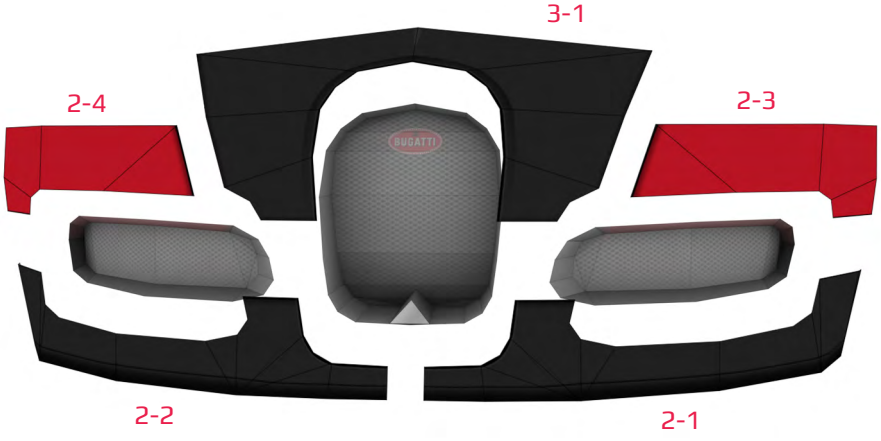

Designed by Taras Lesko. Not for resale or reproduction. © 2013 VisualSpicer.com

3

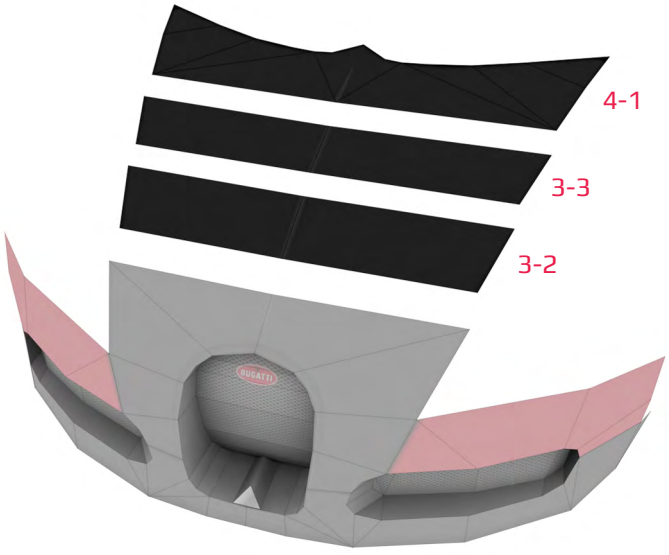

4

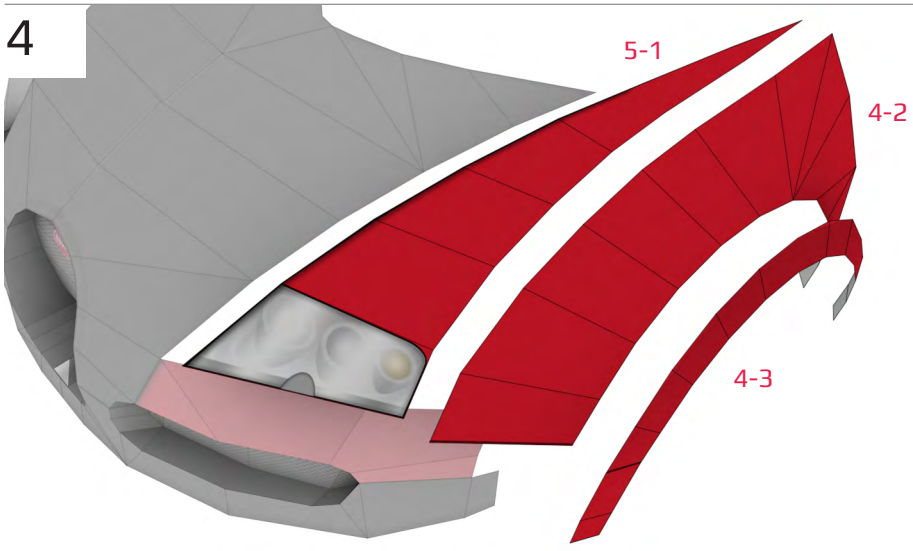

5

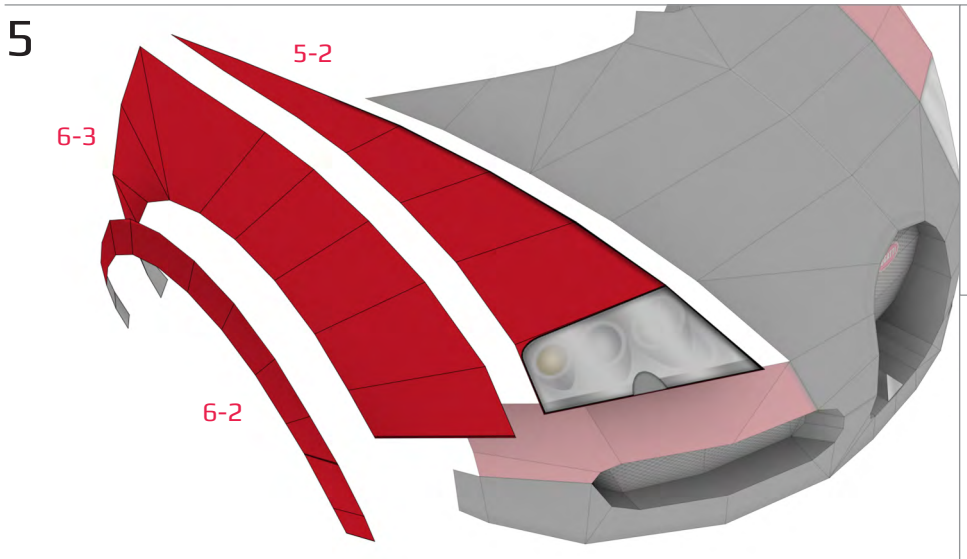

Designed by Taras Lesko. Not for resale or reproduction. © 2013 VisualSpicer.com

6

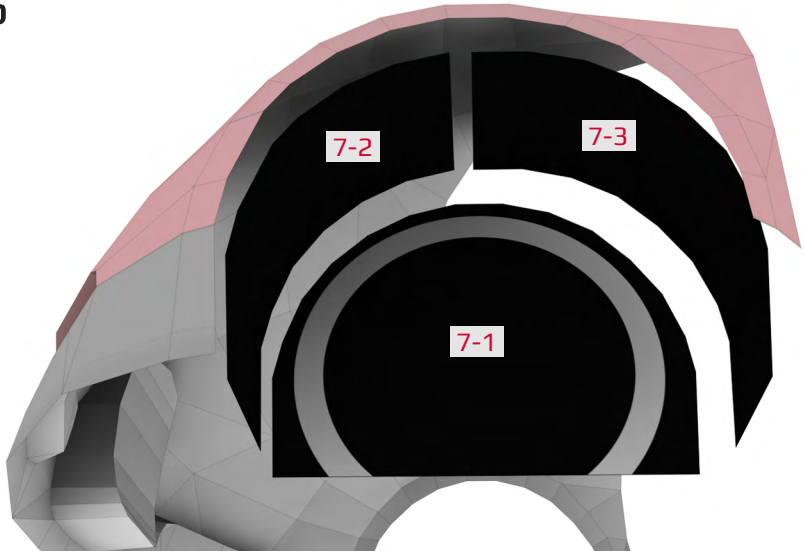

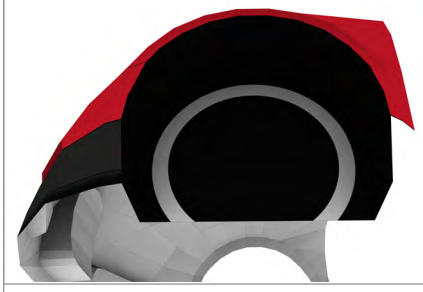

7

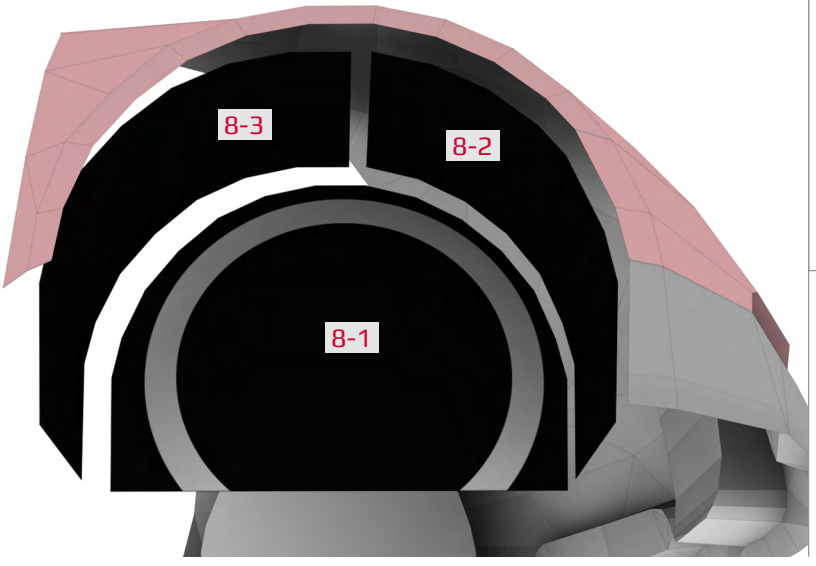

8

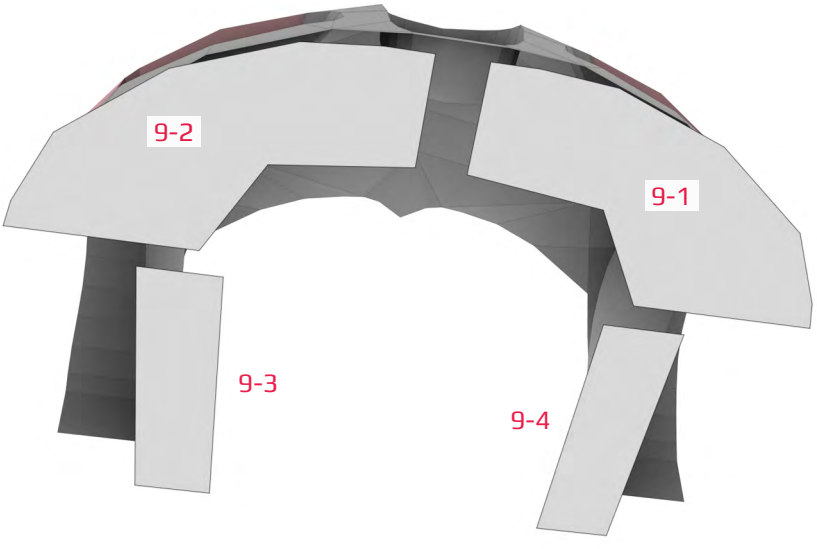

Designed by Taras Lesko. Not for resale or reproduction. © 2013 VisualSpicer.com

9

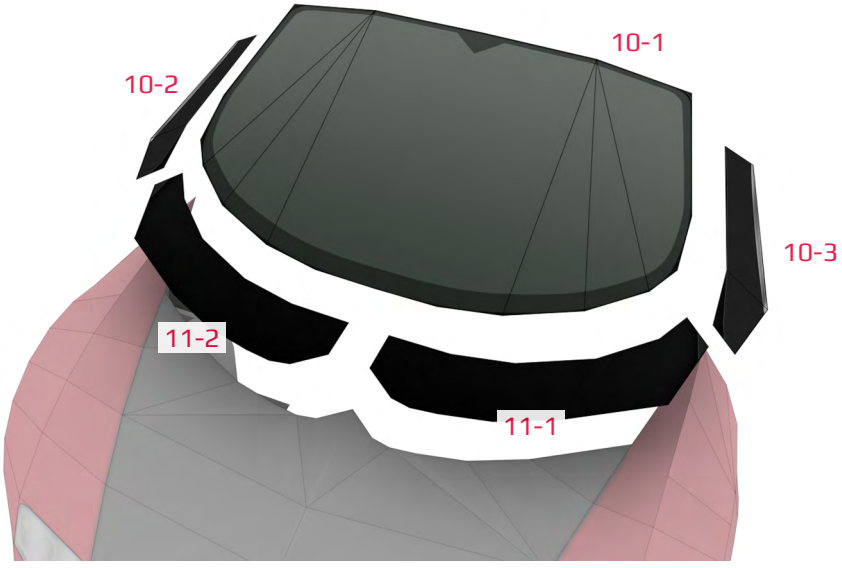

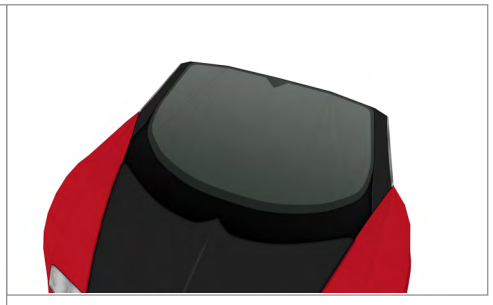

10

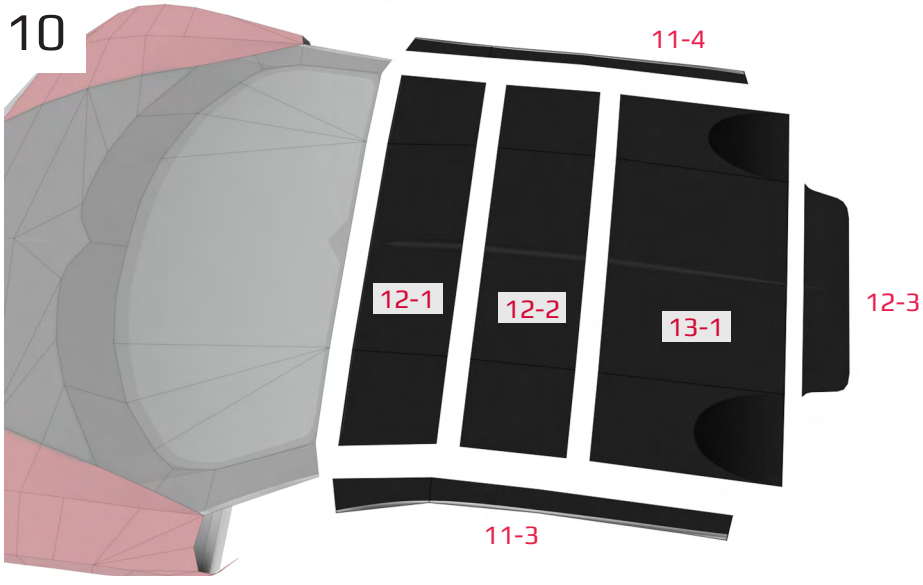

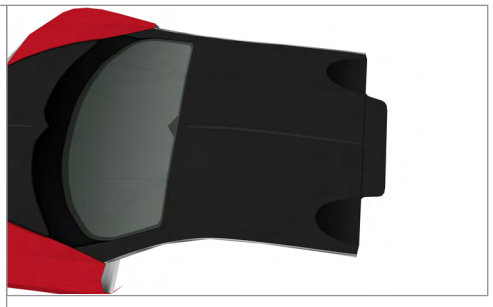

11

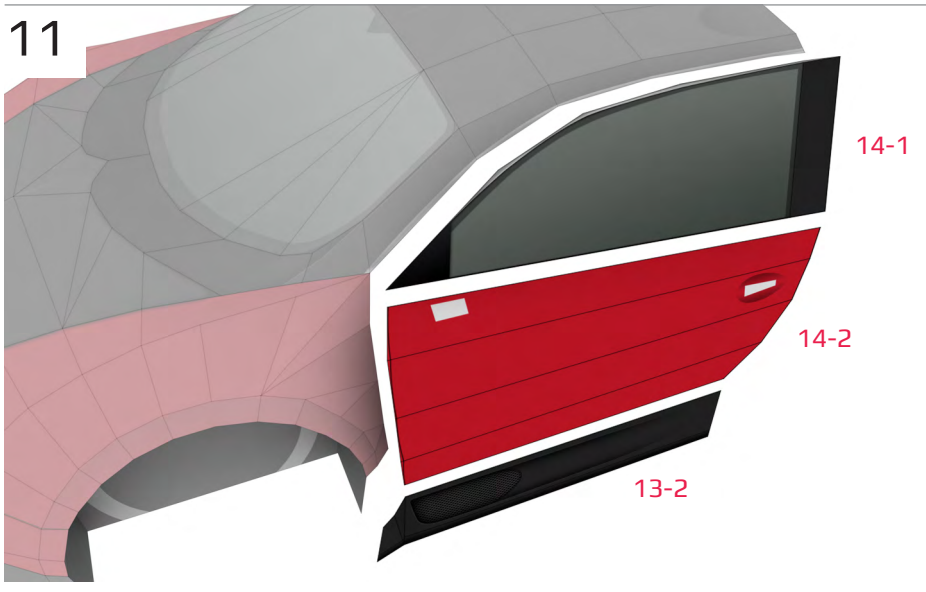

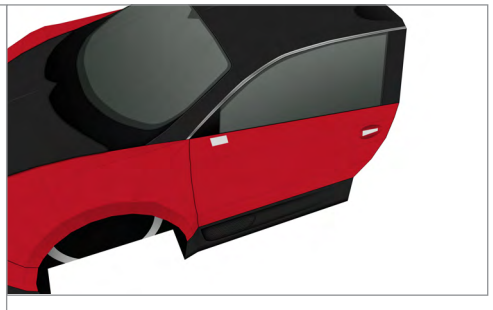

Designed by Taras Lesko. Not for resale or reproduction. © 2013 VisualSpicer.com

12

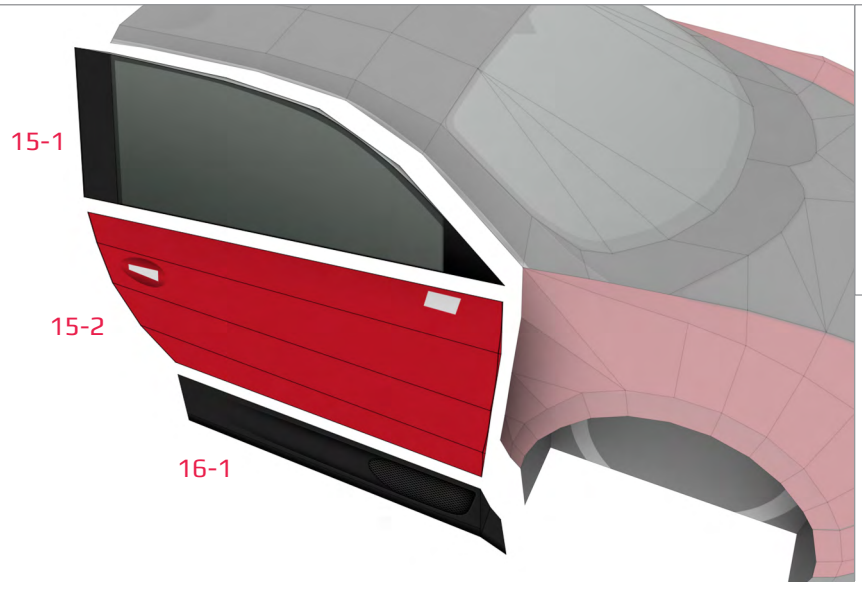

13

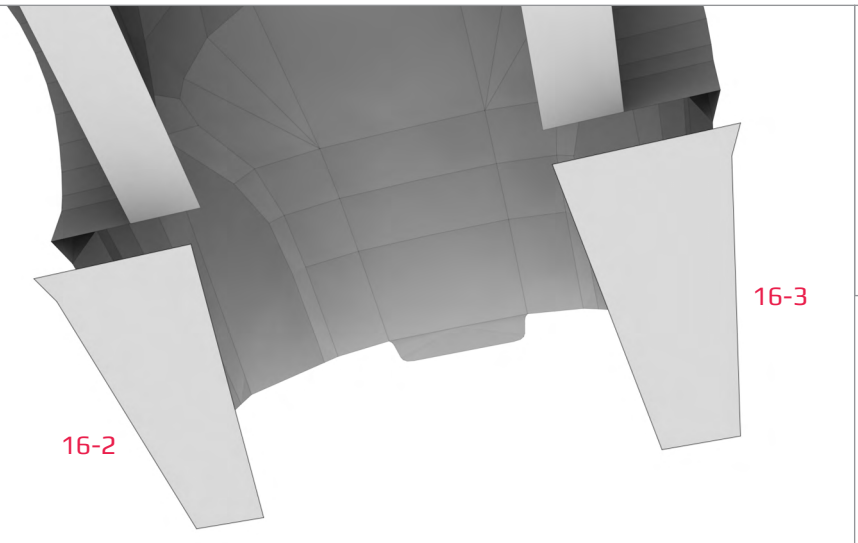

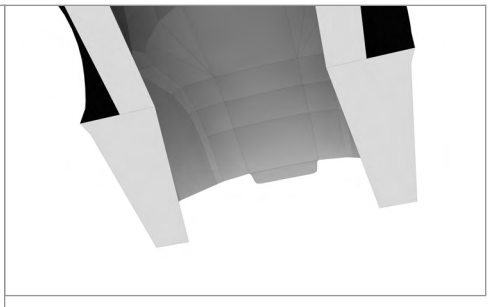

14

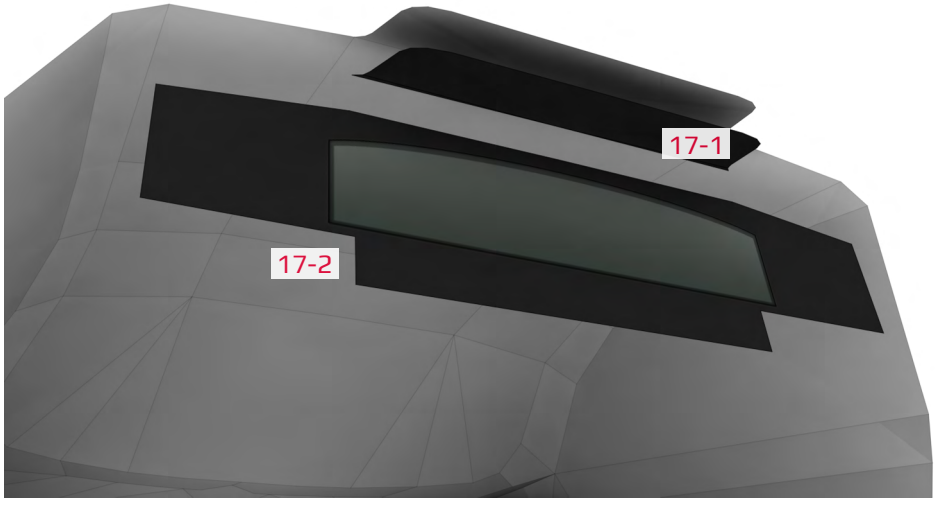

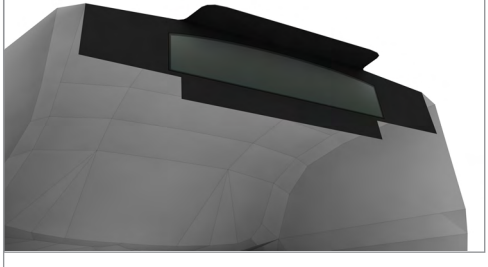

Designed by Taras Lesko. Not for resale or reproduction. © 2013 VisualSpicer.com

15

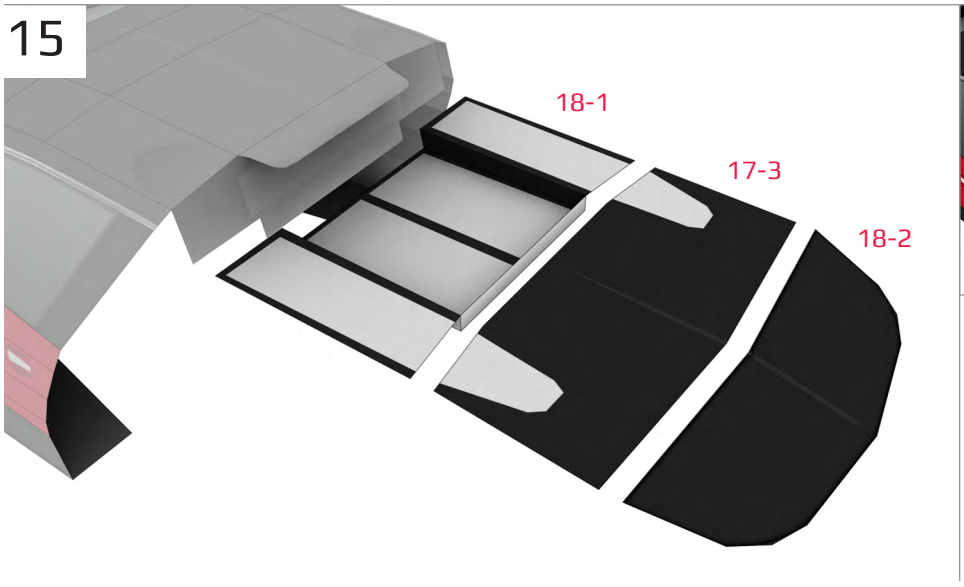

16

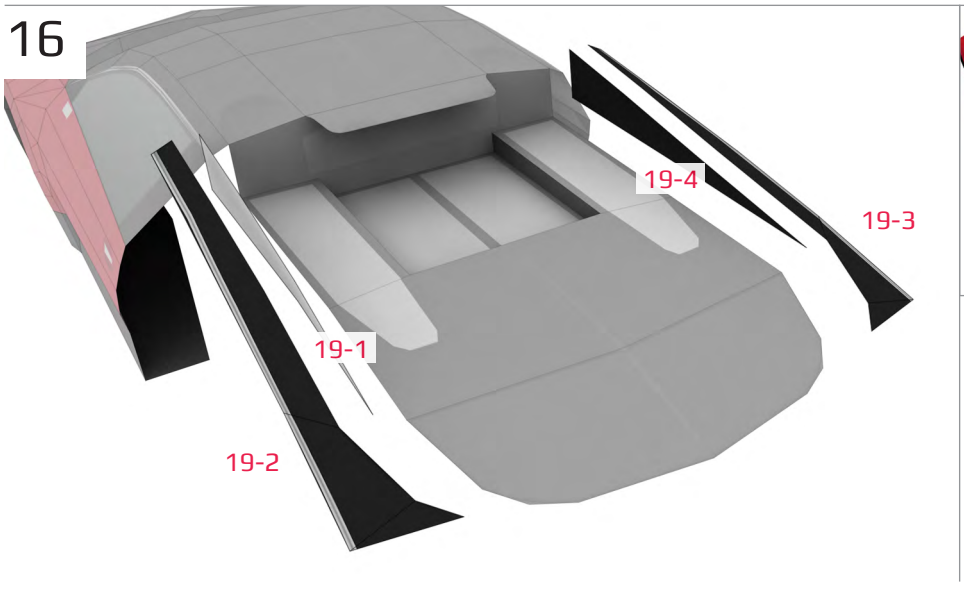

17

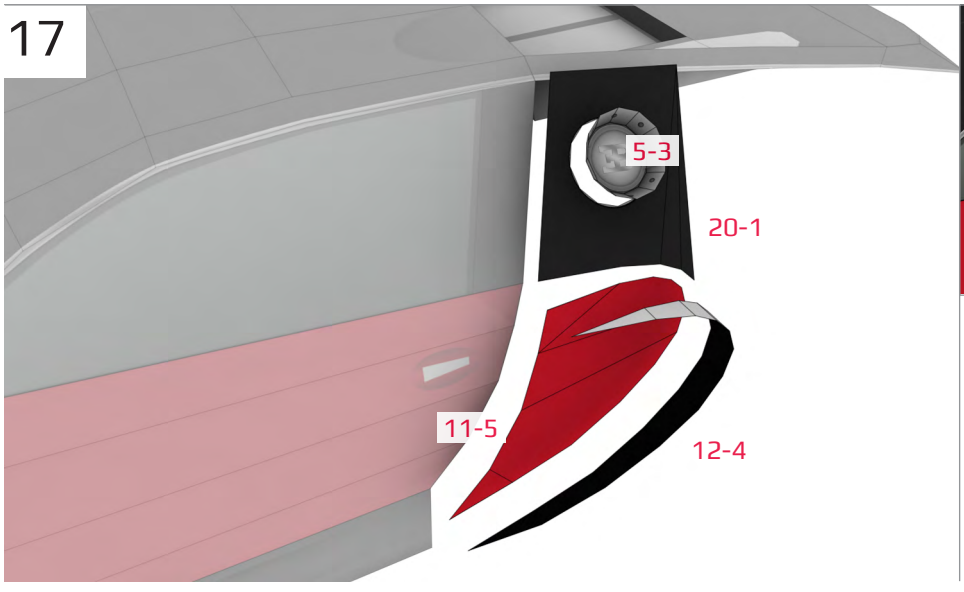

Designed by Taras Lesko. Not for resale or reproduction. © 2013 VisualSpicer.com

18

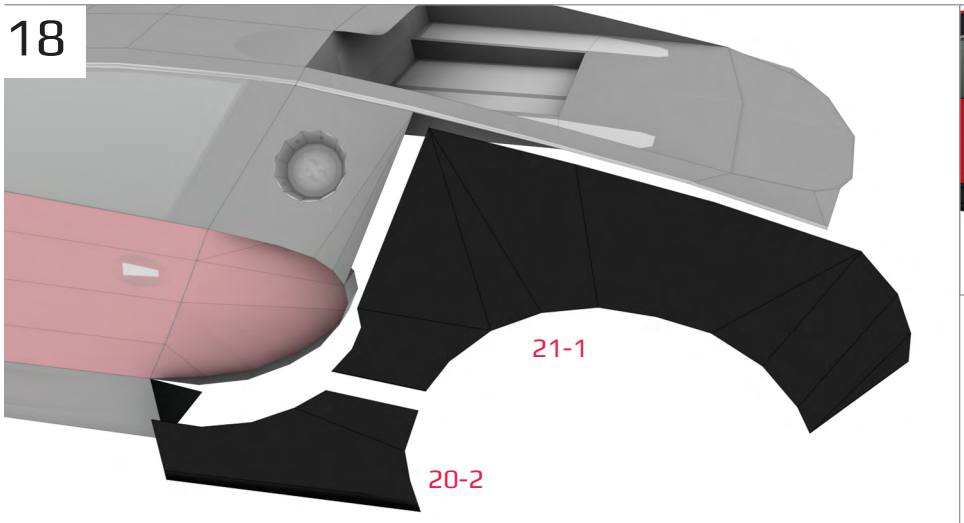

19

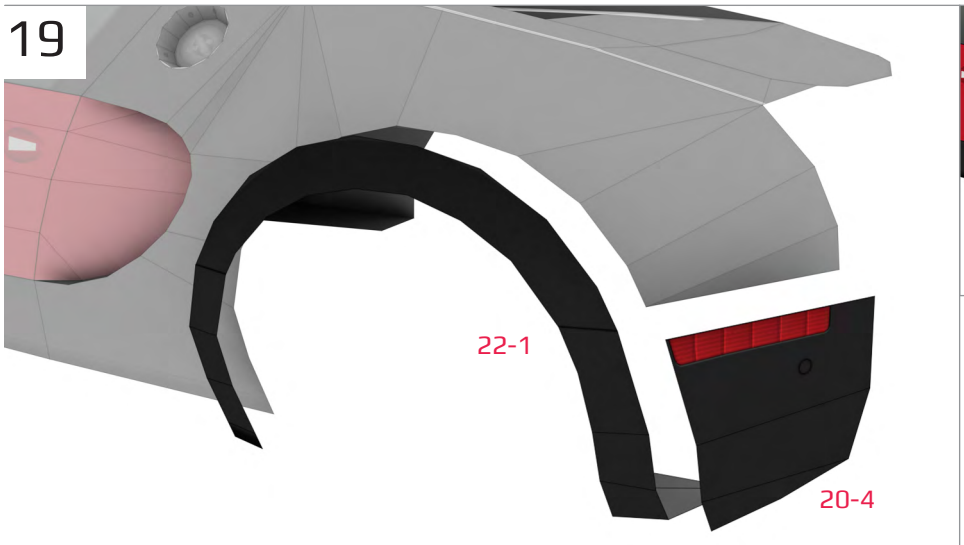

20

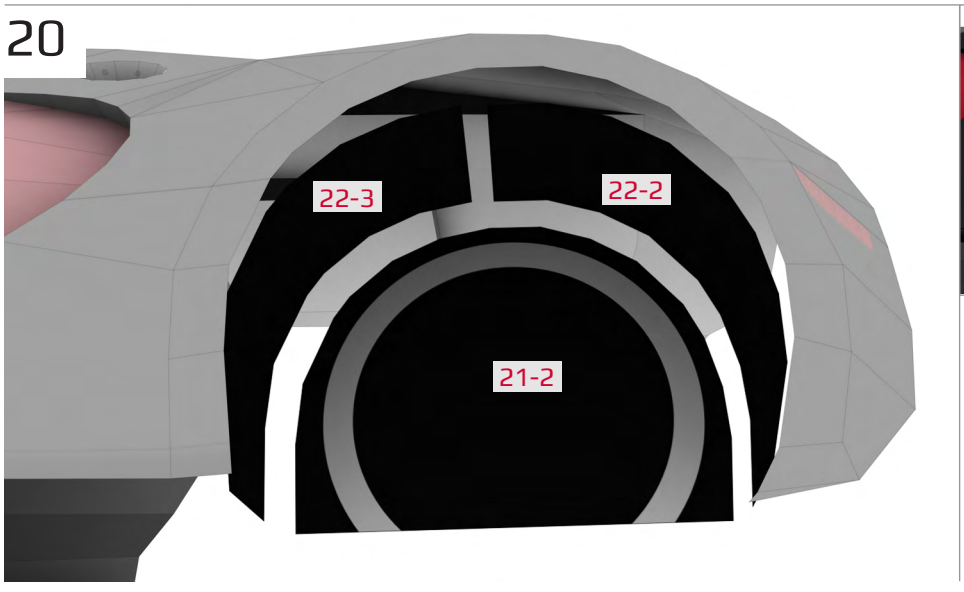

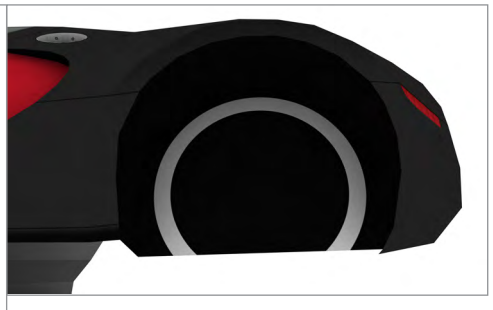

Designed by Taras Lesko. Not for resale or reproduction. © 2013 VisualSpicer.com

21

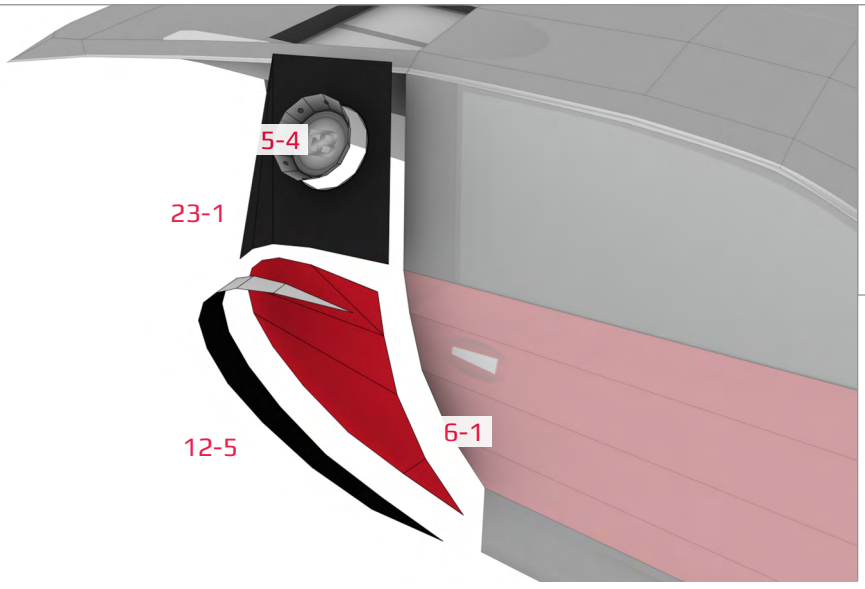

22

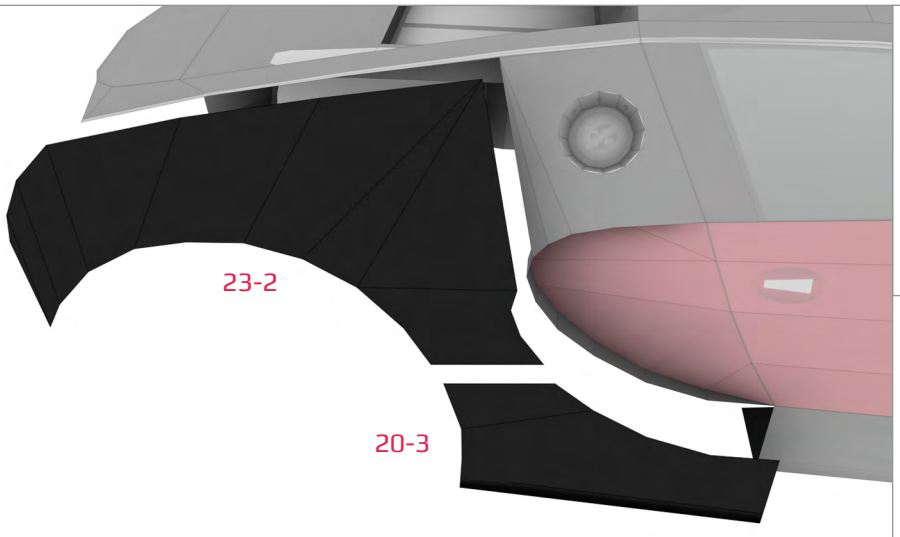

23

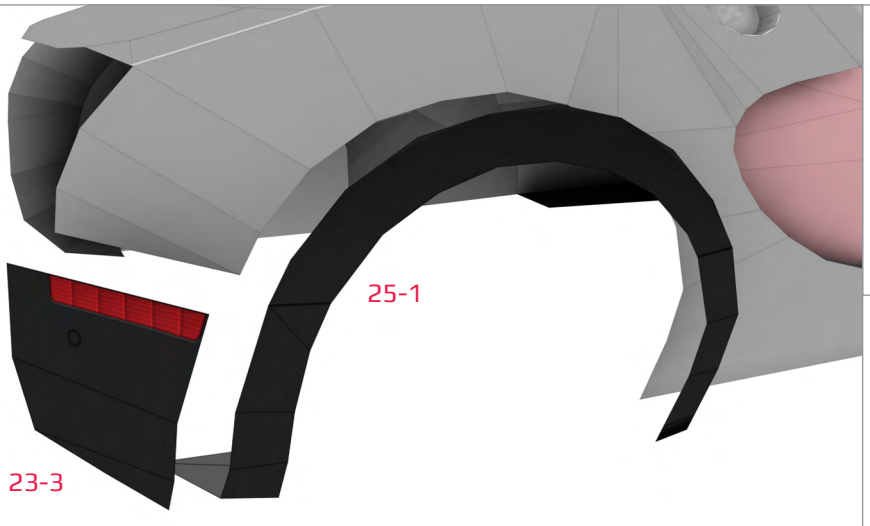

Designed by Taras Lesko. Not for resale or reproduction. © 2013 VisualSpicer.com

24

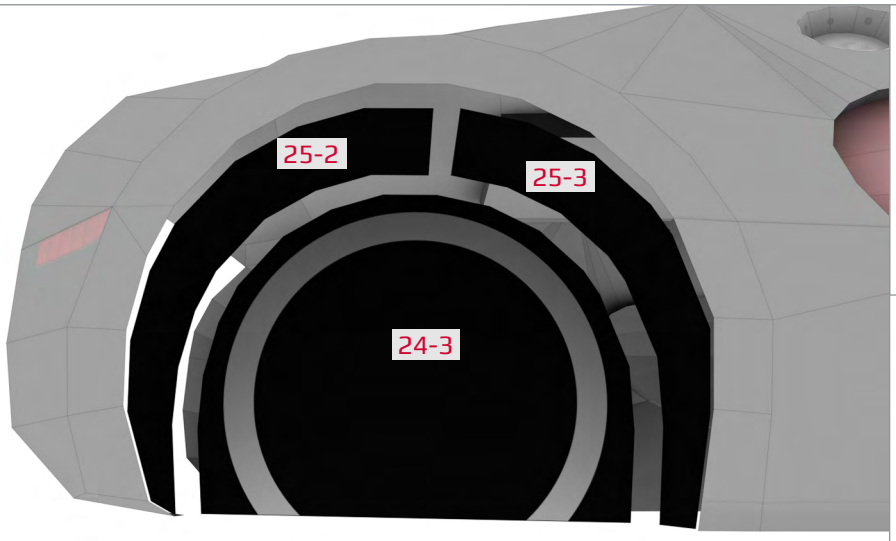

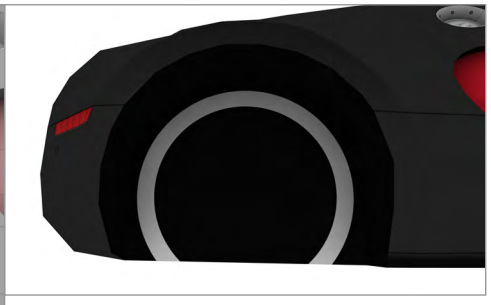

25

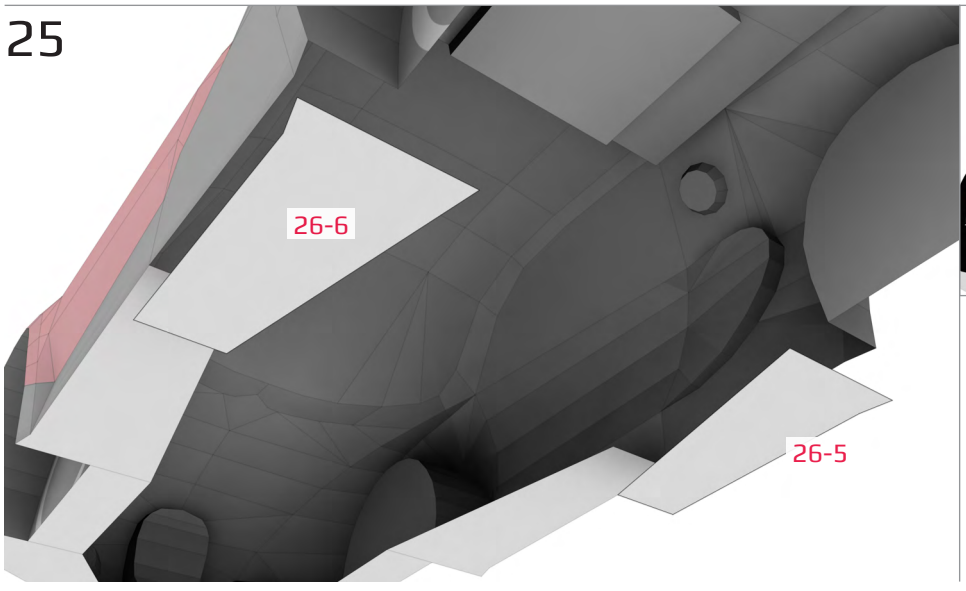

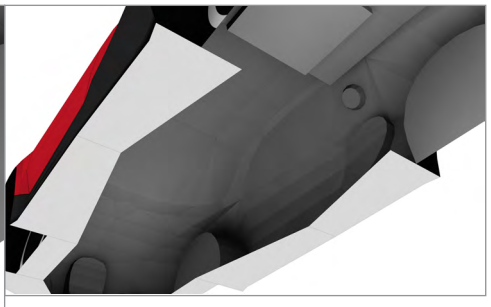

26

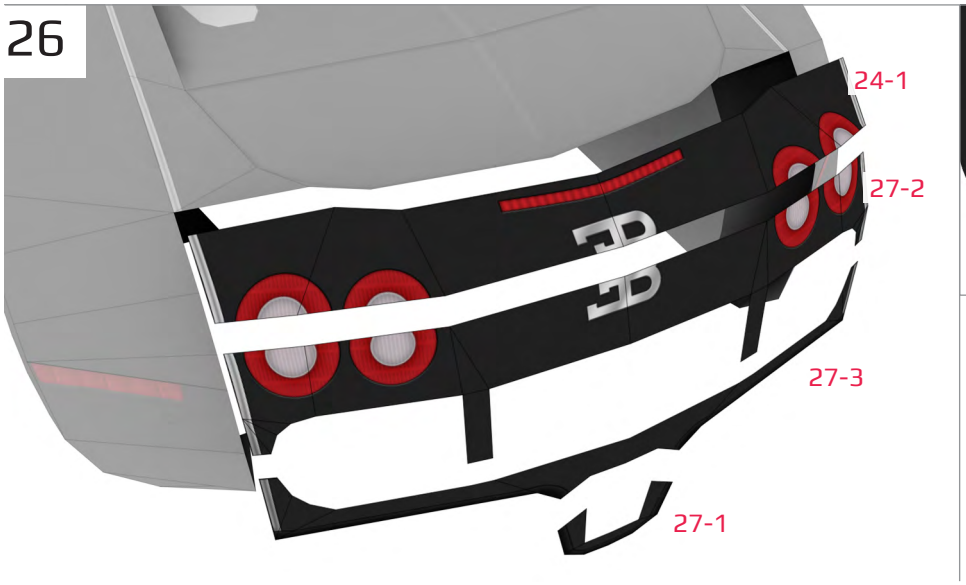

Designed by Taras Lesko. Not for resale or reproduction. © 2013 VisualSpicer.com

27

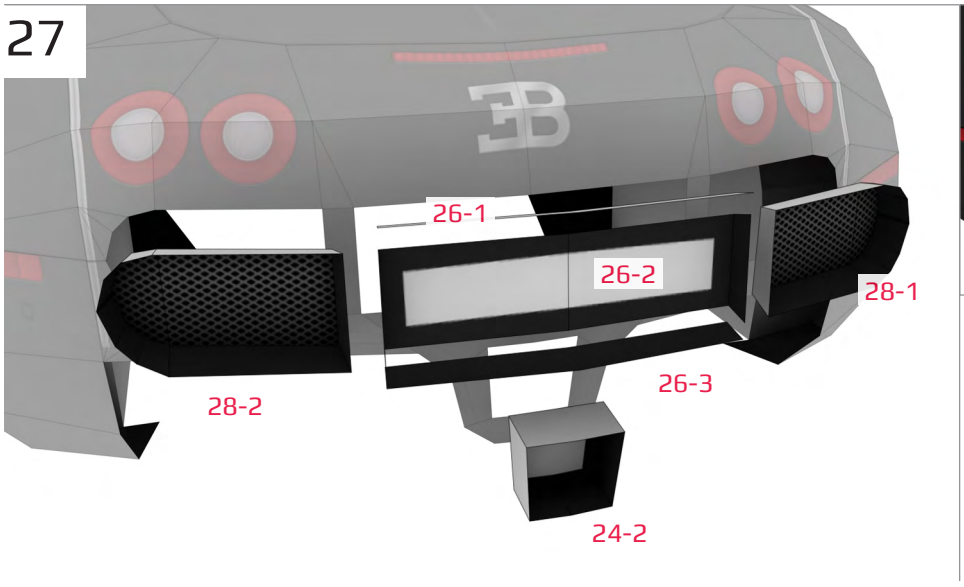

28

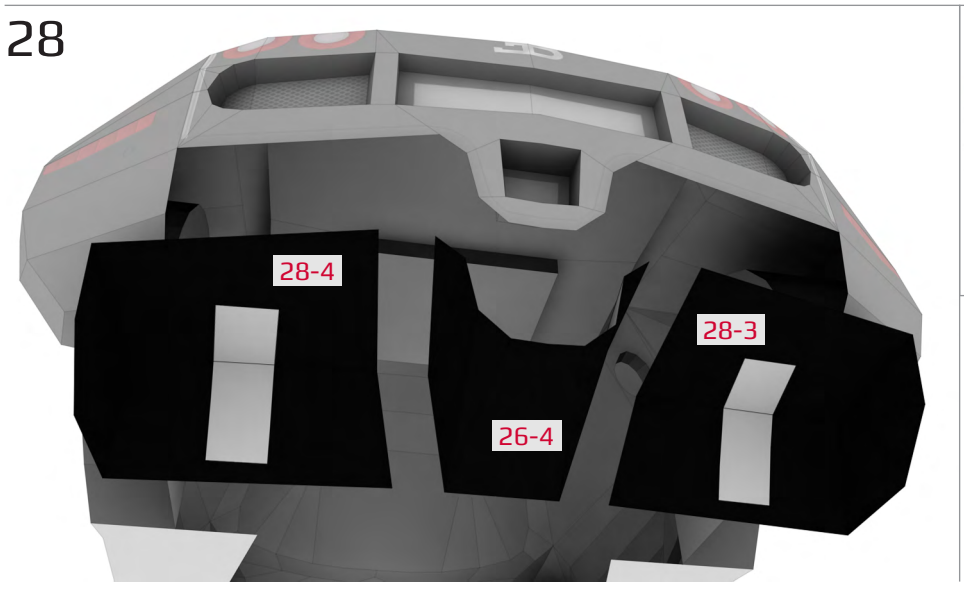

29

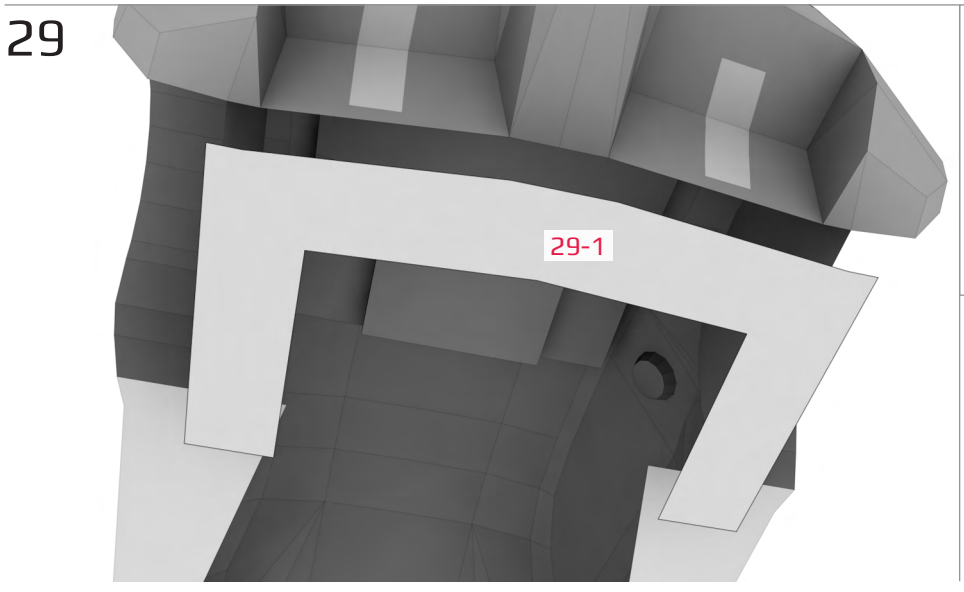

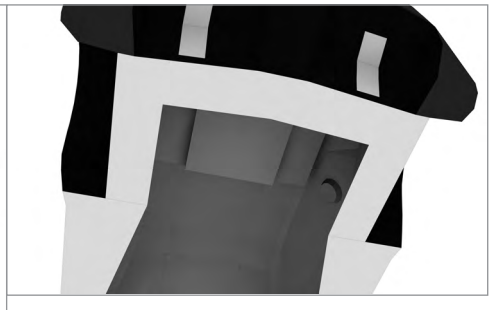

Designed by Taras Lesko. Not for resale or reproduction. © 2013 VisualSpicer.com

30

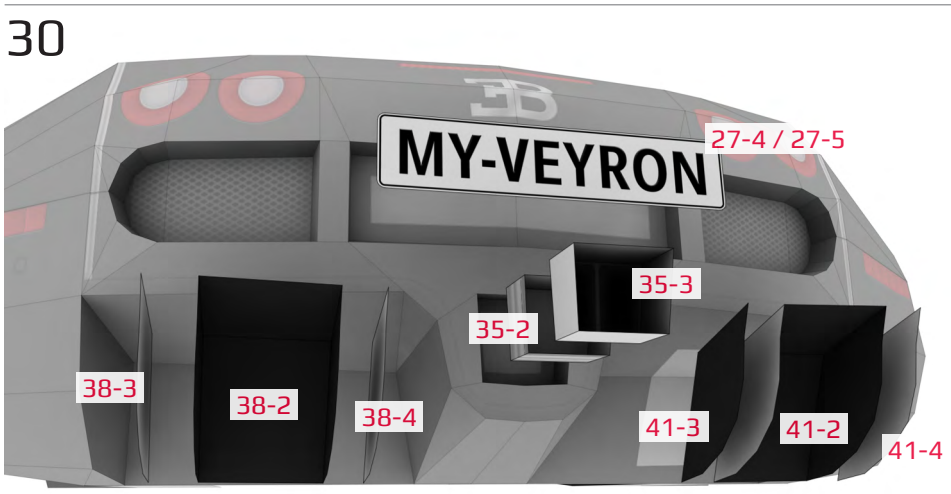

31

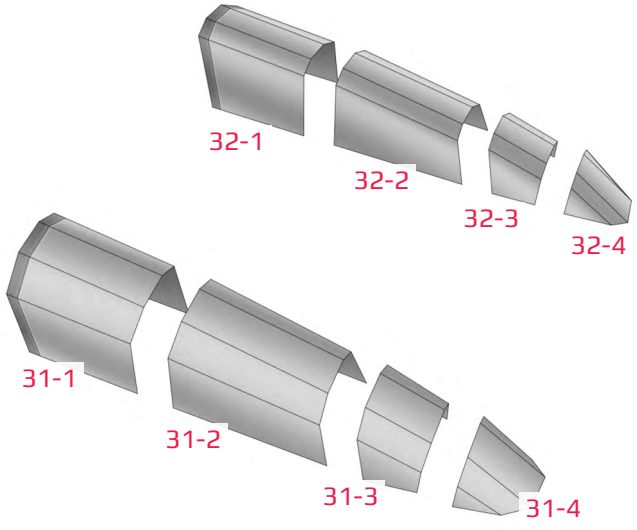

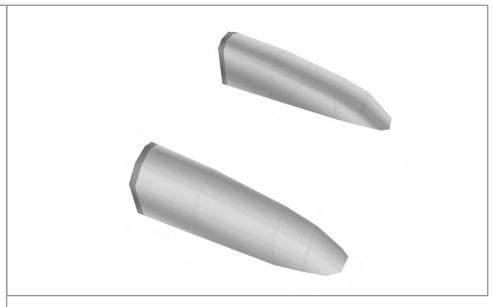

32

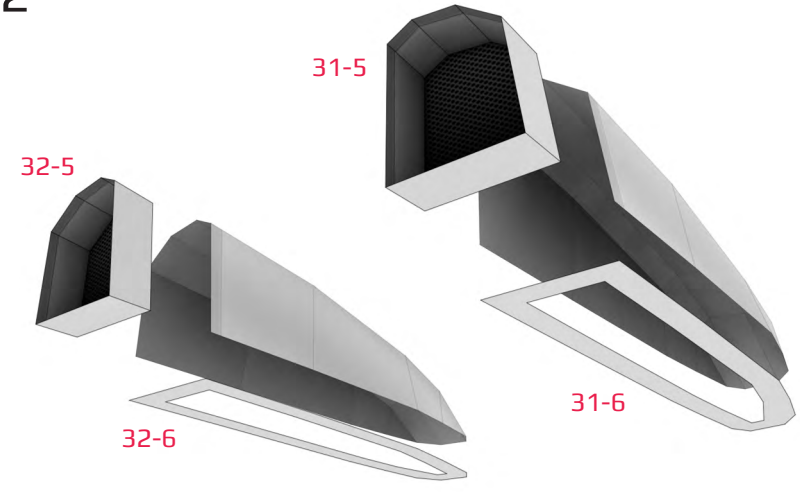

Designed by Taras Lesko. Not for resale or reproduction. © 2013 VisualSpicer.com

33

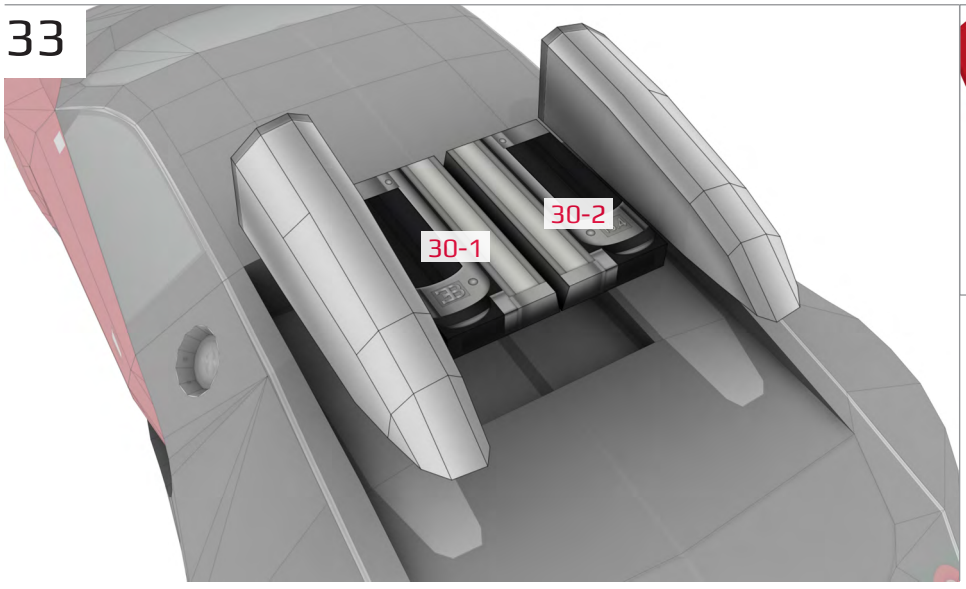

34

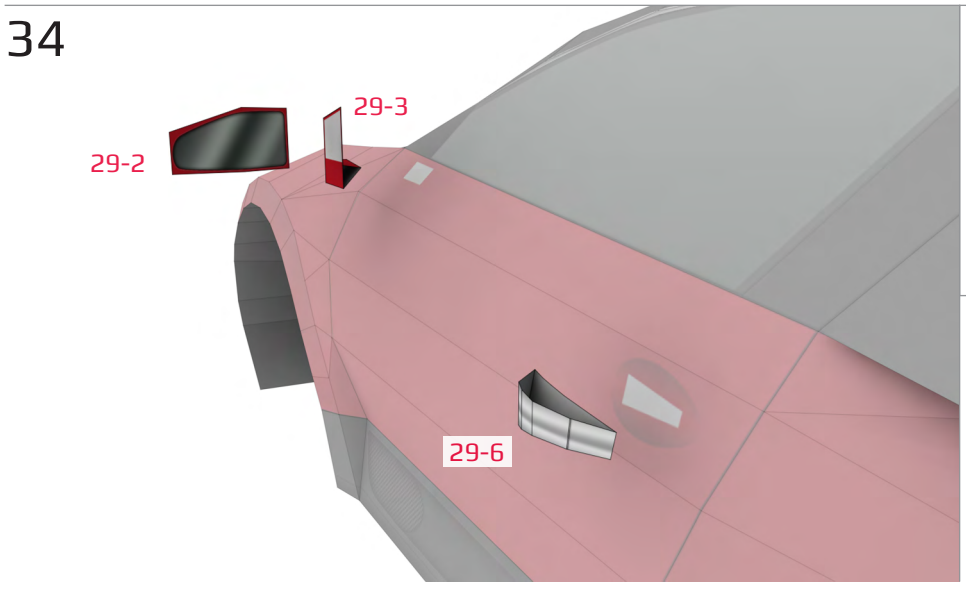

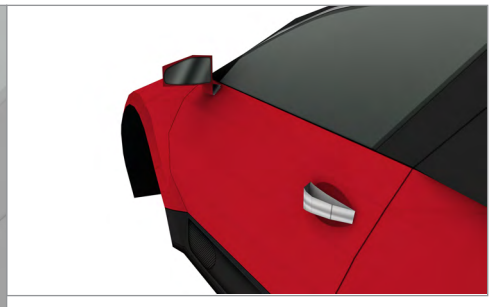

35

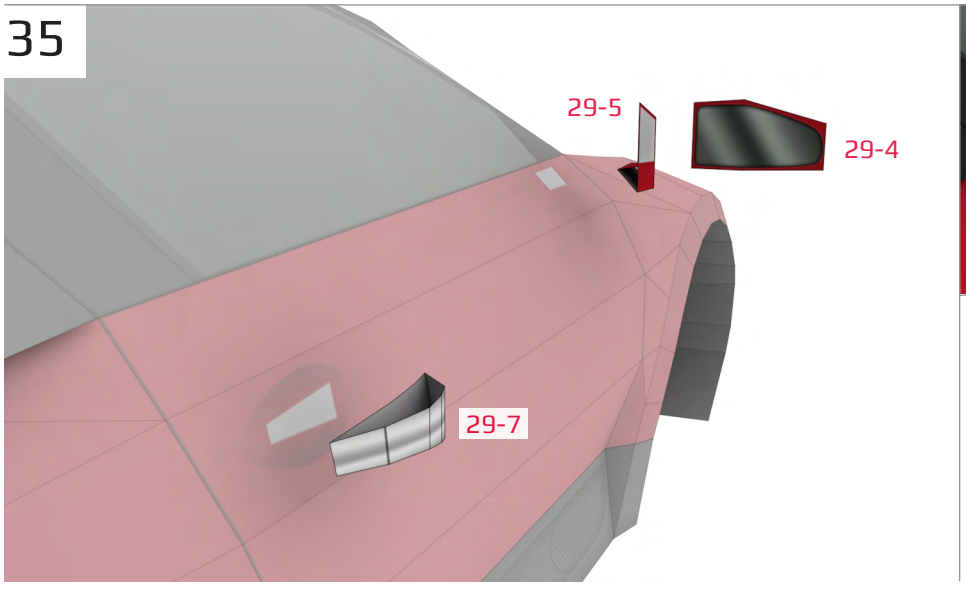

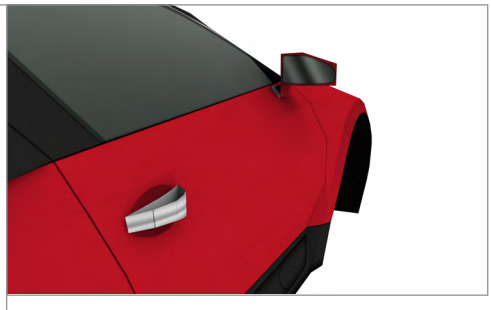

Designed by Taras Lesko. Not for resale or reproduction. © 2013 VisualSpicer.com

36

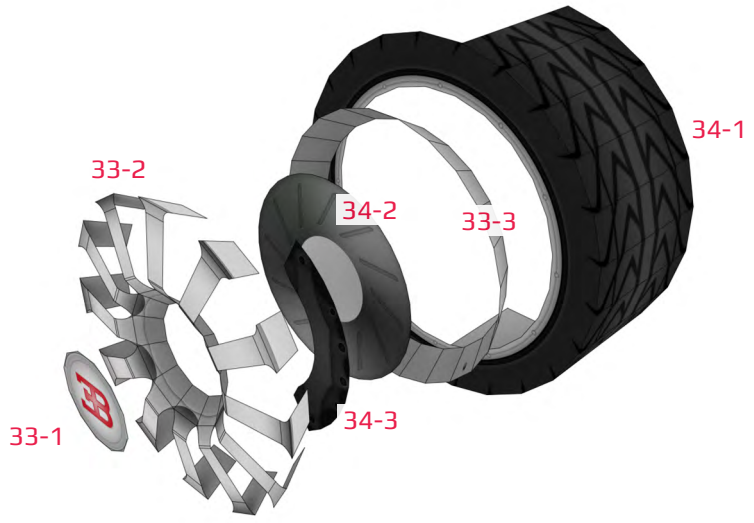

37

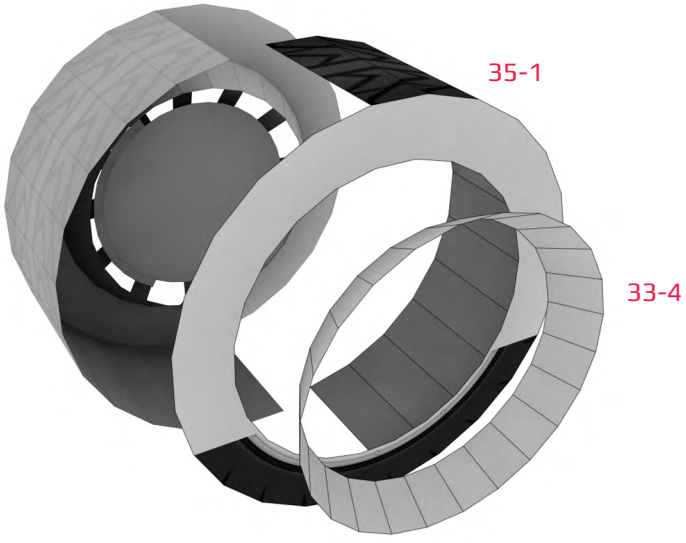

38

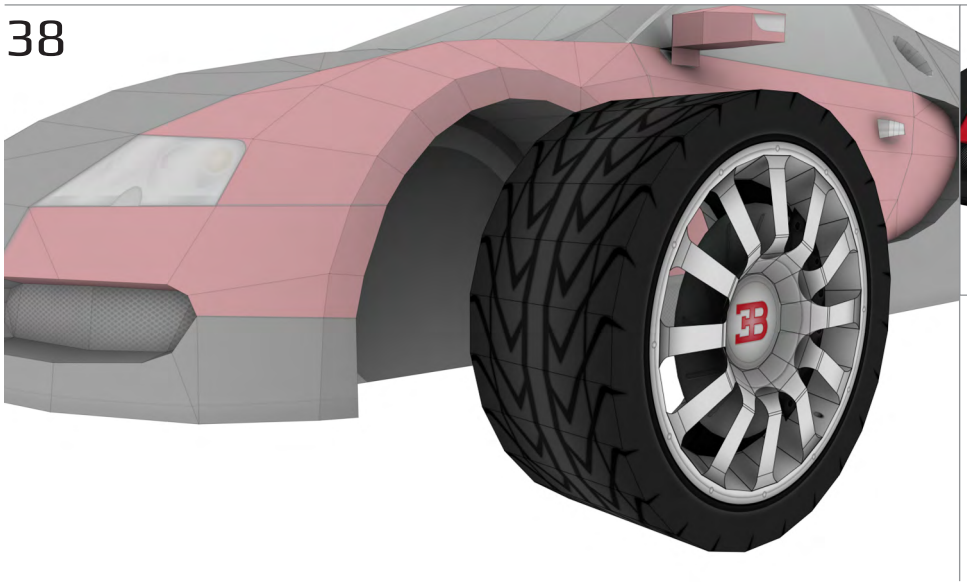

Designed by Taras Lesko. Not for resale or reproduction. © 2013 VisualSpicer.com

39

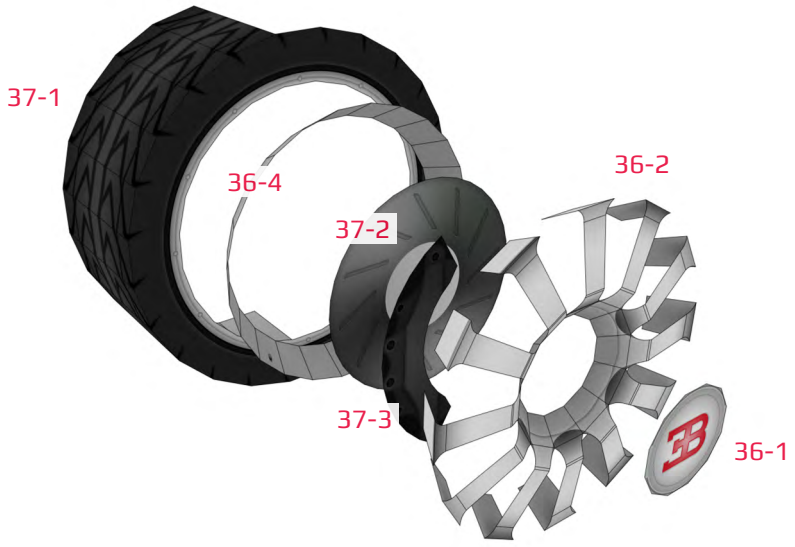

40

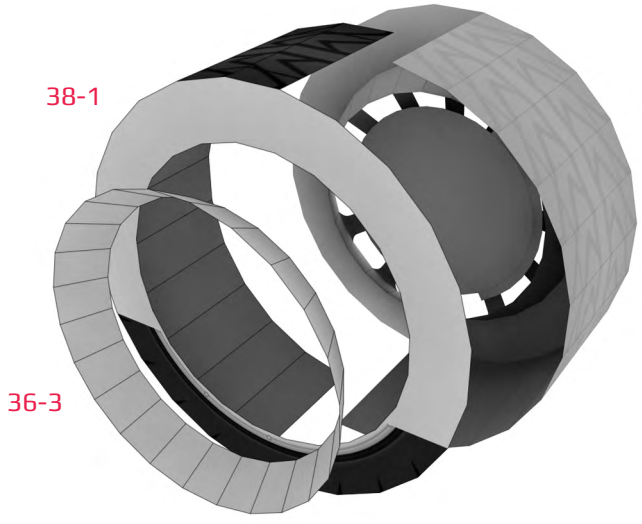

41

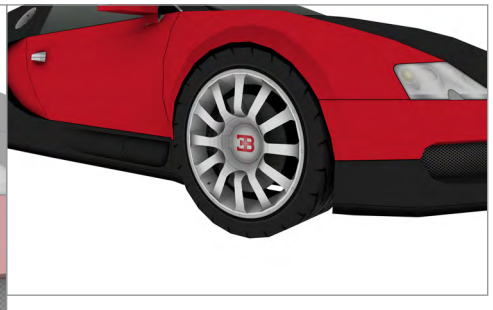

Designed by Taras Lesko. Not for resale or reproduction. © 2013 VisualSpicer.com

42

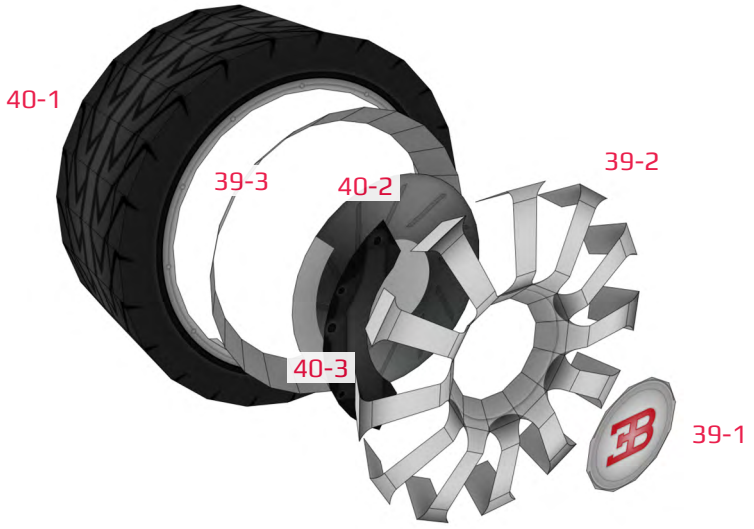

43

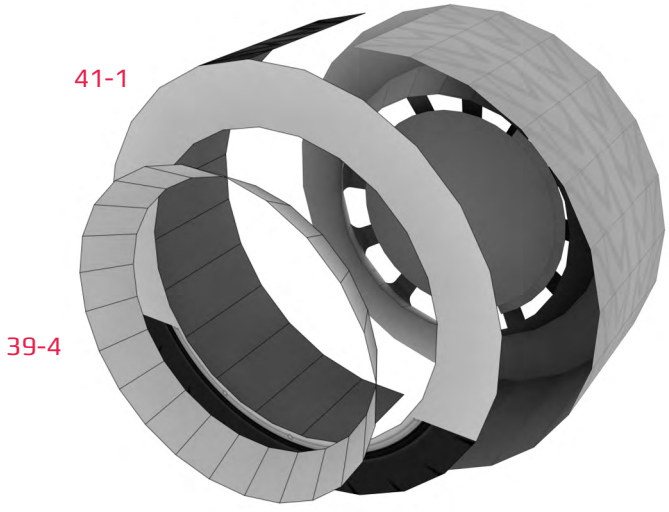

44

Designed by Taras Lesko. Not for resale or reproduction. © 2013 VisualSpicer.com

45

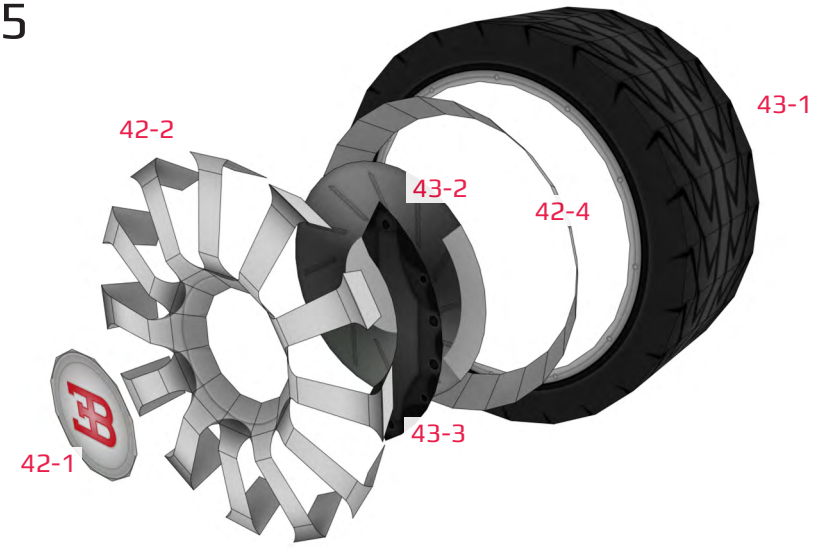

46

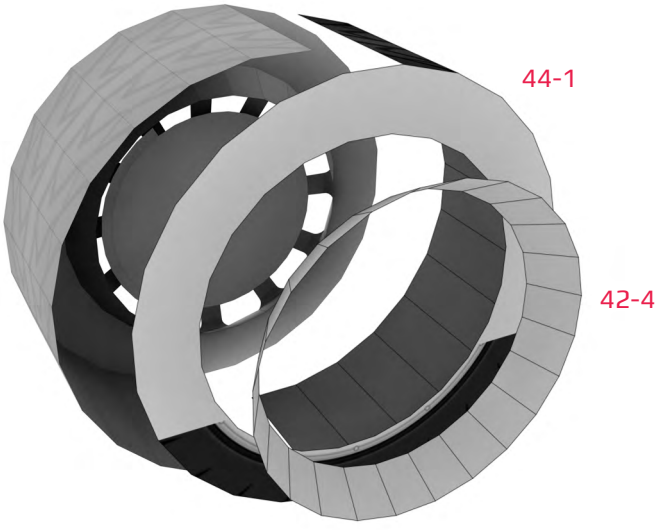

47

Designed by Taras Lesko. Not for resale or reproduction. © 2013 VisualSpicer.com

THANK YOU

Visit visualspicer.com for more of my creative work and downloadable papercrafts. Send questions, suggestions or comments to mail@visualspicer.com.

- Taras Lesko

Colossians 3:23-24

Whatever my hands find to do, I work at it with all my heart, as working for the Lord, Jesus Christ...

Not for resale or reproduction. © 2013 VisualSpicer.com